GET A PERFECTLY SMOOTH SURFACE WITHOUT ANY SANDING

Woodsmith®

Woodsmith.com

Vol. 31 / No. 184

Woodsmith 30 YEARS 1979 - 2009

CONTROL THE CLUTTER WITH A DROP-FRONT DESK

Plus:

7 Secrets to Super-Fast Joinery

Improve the Accuracy of Your Woodworking for Under $15

Build Better-Looking Plywood Projects

$4.95US

09>

0 71896 48442 7

Please display until Sep 29

A Publication of August Home Publishing

Table of Contents

from our readers
Tips & Techniques 4

all about
Knock-Down Fasteners 8
Take a look at some handy hardware that makes assembling and disassembling projects a breeze.

tools of the trade
Secrets to a Smooth Surface 10
A couple of traditional hand tools can take the hard work out of smoothing a workpiece.

jigs and fixtures
Using Brass Set-Up Gauges 12
When fast, precise tool setup is the goal, here's a simple accessory that gets the job done.

techniques from our shop
Vertical Cuts on the Table Saw. . . .14
With help from a couple of shop-built jigs, you can make more than just the basic cuts.

tips from our shop
Shop Notebook 30

woodworking essentials
Seamless Plywood Edging 42
Here are the tips and tricks we use to guarantee perfect edging on plywood panels.
Woodsmith GO ONLINE EXTRAS

working with tools
Avoiding Router Table Tearout. 44
It's easy to tame tearout on the router table by following a few basic guidelines.

finishing room
A Distressed Milk Paint Finish. 46
We'll show you how to give your project the time-worn look of a classic antique.

details of craftsmanship
Carving Berry and Rod Molding . . .48
You'll find that carving this traditional decorative molding is surprisingly simple.

in the mailbox
Q & A 50

hardware and supplies
Sources 51

Frame and Easel page 18

Glass-Panel Coffee Table page 22

projects

weekend project

Frame and Easel 18

This beautiful frame and easel is guaranteed to put a favorite family photo in the best light. After an enjoyable weekend in the shop, you'll be rewarded with a lifetime keepsake.

Woodsmith GO ONLINE EXTRAS

designer series project

Glass-Panel Coffee Table 22

Building this uniquely designed coffee table is guaranteed to teach you a couple of new tricks. You'll get a healthy dose of quality shop time along with a very stylish end result. DESIGNER'S NOTEBOOK

heirloom project

Drop-Front Desk 32

You might want to build this project for its classic appearance — or maybe for its practicality. But I think you'll agree, the real hook here is the challenging woodworking.

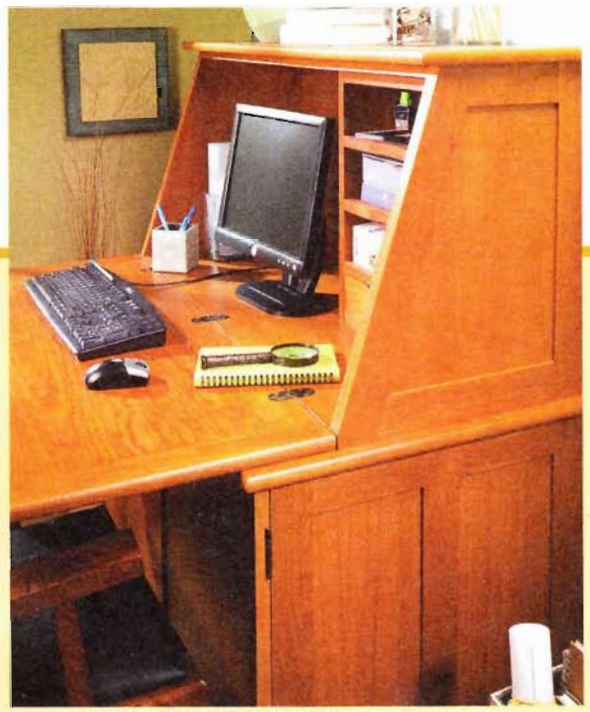

Drop-Front Desk page 32

editor's note
Sawdust

No doubt you've heard the saying about how you can't teach an old dog new tricks. The same thing can probably be said of many woodworkers. We tend to get comfortable with certain types of joinery or methods of doing things, and then rarely venture outside of our own comfort zone.

One area of woodworking that has always appeared a little intimidating to me is carving. It seems like a painstaking skill that requires years of practice to master. So when Ted Raife, our senior editor, handed me a piece of molding with a string of delicately carved beads and rods, I was impressed. But when he told me that it only took him about half an hour to make, and that it was his first attempt — well, now I was *really* impressed.

As it turns out, this molding (called a "berry and rod") is actually quite simple to make, even if you've never done any carving. It's just a matter of making a few basic, repetitive cuts. It doesn't require a lot of practice or artistic ability like some types of carving. And the nice thing is that you only need two carving tools to do it. It's really the perfect way to spend a relaxing evening in the shop while trying your hand at a new skill.

But you don't have to attempt something as offbeat as carving to learn a new "trick." One of the projects in this issue — the glass-panel coffee table on page 22 — features a unique method for joining the legs of the table to the frame. The technique involves creating a large notch at the top of each leg for the frame to rest in. The interesting part is that it's all done on the table saw. The secret is in the leg construction. I won't go into all the details here. (You'll have to read the article for that.) But be careful. You may just learn something new — without even realizing it.

Terry

Woodsmith GO ONLINE EXTRAS

This symbol lets you know there's more information online at Woodsmith.com. There you'll see step-by-step videos, technique and project animation, bonus cutting diagrams, and a lot more.

Tips & Techniques

▲ C-clamp swings down and out of the way when locking pin is withdrawn.

Mortising Machine Clamp

The hold-down on my benchtop mortiser doesn't hold workpieces as firmly as I'd like. If the workpiece twisted even a little bit, the chisel would bind in the mortise. So I needed a clamp to hold workpieces tightly against the fence.

To do this, I added a "modified" C-clamp to an auxiliary base (right photo). It's designed to swing out of the way when not in use (left margin photo).

First, cut off the top jaw of a 6" C-clamp (detail 'a') and round the cut end so it will swing easily. Then drill holes in the remaining arm of the clamp for a pivot pin and locking pin.

Next, cut two pieces of plywood to serve as the base for the mortiser. Sandwiched between these plywood pieces are the pivot and locking pins (main drawing below). Grooves are routed in both pieces to hold the pivot and locking pins (detail 'b'). For added stability, I attached a cleat to clamp the base in the vise on my workbench.

In order to slide the locking pin back and forth, you'll need to grind a flat spot on the rod. Then drill and tap a hole through the flat spot to accept a carriage bolt pressed into a hardwood handle. A square nut between the slot and the rod allows a slight twist of the handle to tighten the locking pin.

When I was satisfied that everything was working smoothly, I screwed the two plywood pieces together and bolted the base to my mortiser stand.

Donna Casperson
Dillsburg, Pennsylvania

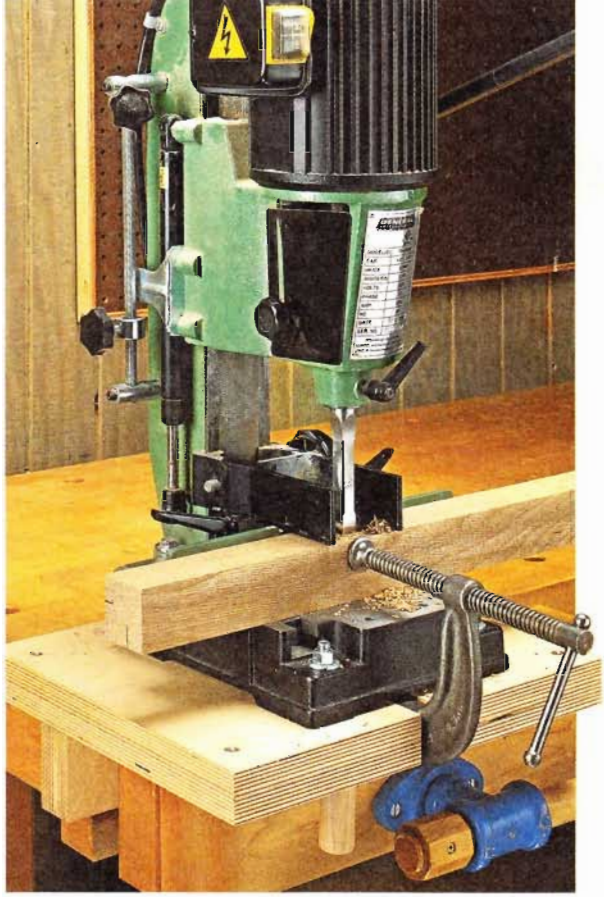

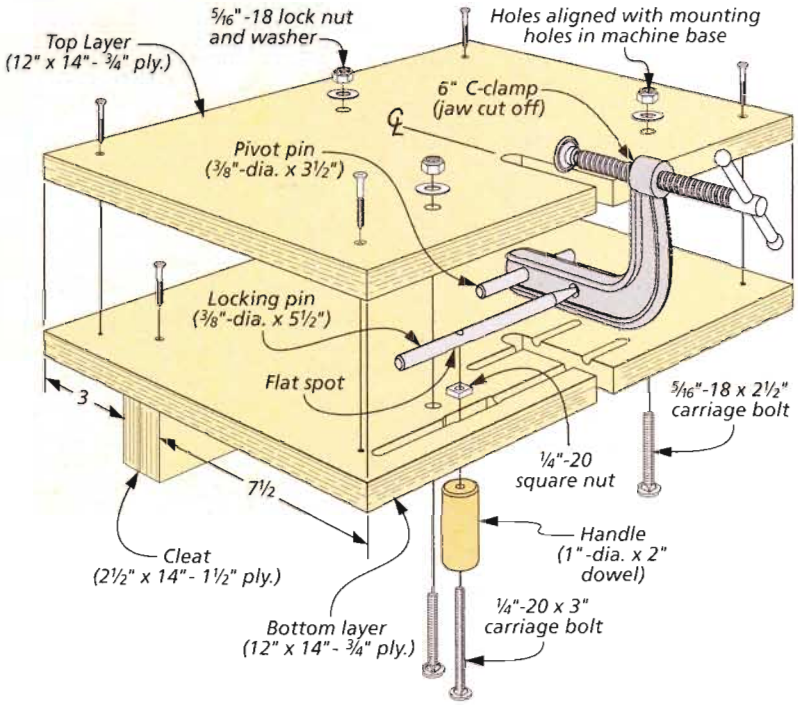

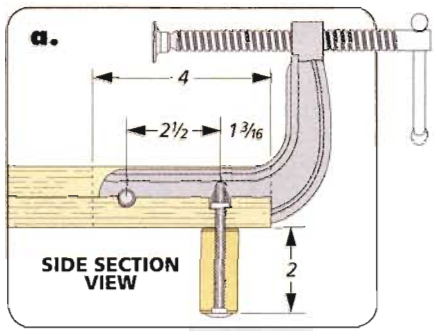

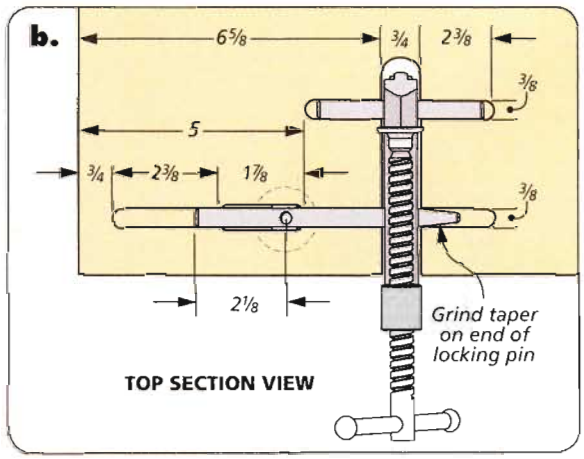

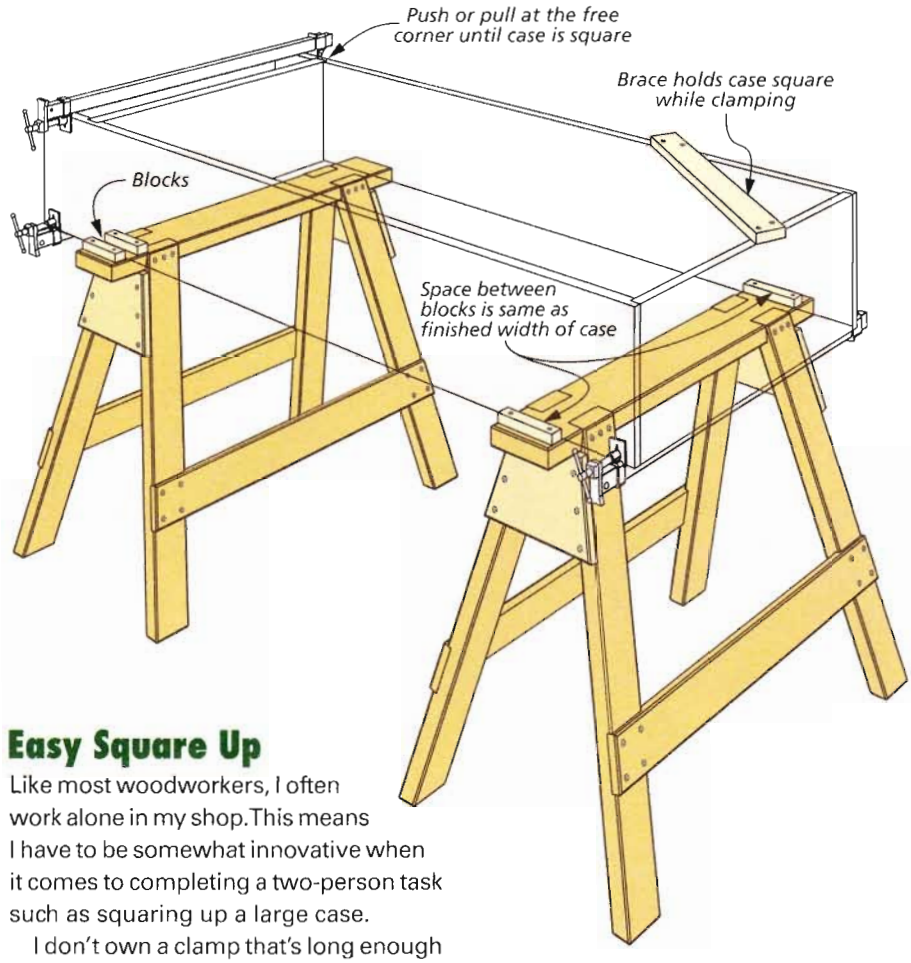

Easy Square Up

Like most woodworkers, I often work alone in my shop. This means I have to be somewhat innovative when it comes to completing a two-person task such as squaring up a large case.

I don't own a clamp that's long enough to pull a large case assembly into square, so I came up with an easy solution. As you can see in the drawing above, I use my sawhorses and a few scraps of wood to square a case.

I spaced the sawhorses far enough apart to support the case and then added a wood block on each end of one sawhorse, spaced the same distance as the finished width of the case. The other sawhorse gets two blocks on one end to hold one corner stable. Then I lay the case on its face fitting the front edge between the wood pieces at the corners.

Once I have the case lightly clamped, I can push or pull the free corner of the case until it comes into square. Then I just anchor a brace at one corner to hold the case square while I apply more clamping pressure at the joints.

Dennis Vertrees
Elizabethtown, Kentucky

SUBMIT YOUR TIPS ONLINE

If you have an original shop tip, we would like to hear from you and consider publishing your tip in one or more of our publications. Go to:

Woodsmith.com
Click on the link,
"SUBMIT A TIP"

You'll be able to tell us all about your tip and upload your photos and drawings. You can also mail your tips to *"Woodsmith Tips"* at the editorial address shown at right. We will pay up to $200 if we publish your tip.

FREE TIPS BY EMAIL

Now you can have the best, time-saving secrets, solutions, and techniques sent directly to your email inbox. Just go to **Woodsmith.com** and click on ***"Sign Up for Free E-Tips."*** You'll receive one of our favorite tips each week.

Woodsmith

No. 184 August/September 2009

PUBLISHER Donald B. Peschke

EDITOR Terry J. Strohman
MANAGING EDITOR Vincent Ancona
SENIOR EDITOR Ted Raife
ASSOCIATE EDITOR Dennis Perkins
ASSISTANT EDITOR Carol Beronich
CONTRIBUTING EDITORS Bryan Nelson, Phil Huber, Randall A. Maxey, Joel Hess
EDITORIAL INTERNS Catherine Seiser, Brianna Nelson

EXECUTIVE ART DIRECTOR Todd Lambirth
SENIOR ILLUSTRATORS David Kreyling, Dirk Ver Steeg, Harlan V. Clark, Peter J. Larson, David Kallemyn
SENIOR GRAPHIC DESIGNER Bob Zimmerman
GRAPHIC DESIGNER Shelley Cronin
GRAPHIC DESIGN INTERN Megan Leafgreen

CREATIVE DIRECTOR Ted Kralicek
SENIOR PROJECT DESIGNERS Ken Munkel, Kent Welsh, Chris Fitch, Jim Downing, Mike Donovan
PROJECT DESIGNER/BUILDER John Doyle
SHOP CRAFTSMEN Steve Curtis, Steve Johnson
SENIOR PHOTOGRAPHERS Crayola England, Dennis Kennedy
ASSOCIATE STYLE DIRECTOR Rebecca Cunningham
SENIOR ELECTRONIC IMAGE SPECIALIST Allan Ruhnke
PRODUCTION ASSISTANT Minniette Johnson
VIDEO EDITOR/DIRECTOR Mark Hayes, Nate Gruca

Woodsmith® (ISSN 0164-4114) is published bimonthly (Feb., Apr., June, Aug., Oct., Dec.) by August Home Publishing Company, 2200 Grand Ave, Des Moines, IA 50312.
Woodsmith® is a registered trademark of August Home Publishing.

Copyright© 2009 August Home Publishing Company. All rights reserved.

Subscriptions: Single copy: $4.95. One year subscription (6 issues), $24.95. (Canada/International add $10 per year, U.S. funds.)
Canadian Subscriptions: Canada Post Agreement No. 40038201. Send change of address information to PO Box 881, Station Main, Markham, ON L3P 8M6.
Canada BN 84597 5473 RT
Periodicals Postage Paid at Des Moines, IA, and at additional offices.
Postmaster: Send change of address to *Woodsmith*, Box 37112, Boone, IA 50037-2112.

WoodsmithCustomerService.com

ONLINE SUBSCRIBER SERVICES

- **VIEW** your account information
- **RENEW** your subscription
- **CHECK** on a subscription payment
- **PAY** your bill
- **CHANGE** your mailing or e-mail address
- **VIEW/RENEW** your gift subscriptions
- **TELL US** if you've missed an issue

CUSTOMER SERVICE Phone: 800-333-5075

SUBSCRIPTIONS
Customer Service
P.O. Box 842
Des Moines, IA 50304-9961
subscriptions@augusthome.com

EDITORIAL
Woodsmith Magazine
2200 Grand Avenue
Des Moines, IA 50312
woodsmith@woodsmith.com

AUGUST HOME PUBLISHING COMPANY

Printed in U.S.A.

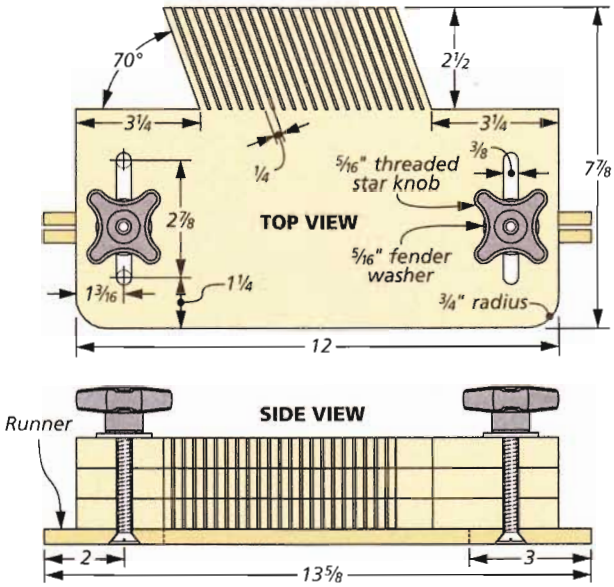

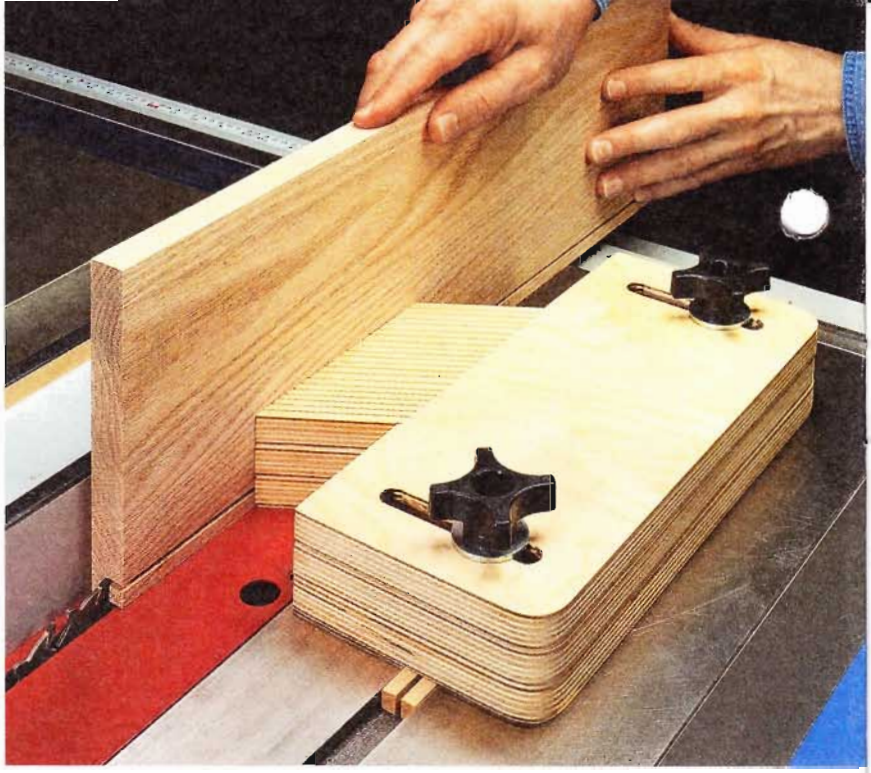

Stacking Featherboards

A featherboard is a great accessory for supporting a workpiece when cutting on the table saw. But if you're cutting a workpiece on edge, most featherboards aren't thick enough to provide adequate support.

That's why I built this stacking featherboard. It has a full height of 2¼", high enough to hold most tall pieces firmly against the fence. And if you're working with a flat workpiece, you can reduce the height by removing one or two layers.

The three layers for the featherboard can be cut from a single 12" x 24" sheet of plywood. After the plywood is cut to size, you can cut the fingers of the featherboard and drill out the adjusting slots for the machine screws, as shown in the drawing above.

Next cut a piece for the runner. The runner is ripped down the center on either end and drilled out for the flat-headed screws that tighten it in the miter slot.

Finally, I added two star knobs to the top of the screws. Tightening the knobs expands the runner and locks it in.

Art Outlaw
Evansville, Indiana

Shelf Standard Drying Rack

I don't have a large shop, so whenever I have to finish a project with a lot of shelves, I struggle to find a place to set all the shelves while they dry.

While building a bookcase with metal shelf standards, I came up with an idea for a simple drying rack (photo at left).

To make the rack, I cut four plywood supports. Then I cut a groove down the center of each support and installed the shelf standard. The supports can be clamped to a pair of sawhorses to make a temporary stand.

Once you apply the finish, you can stack shelves on the shelf standards. I left about 4" between the shelves to allow air to circulate over the finish.

Andy Grundy
Waconia, Minnesota

Shutter Index Jig

Assembling movable, louvered shutters can be a challenge. But one thing that make this go smoothly is an assembly jig, like the one shown in the photo below. Evenly spaced slots in the sides of the jig hold the louvers while you assemble the frame.

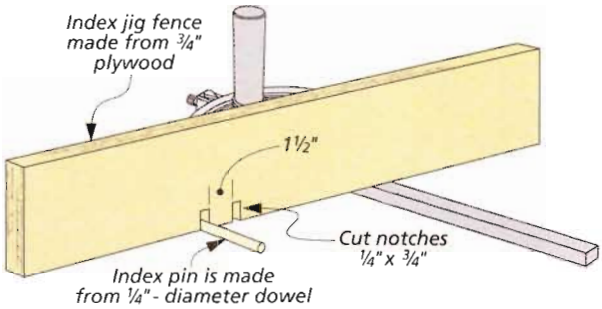

To make building the jig a little easier, I put together a quick indexing jig, as you can see in the drawing and photo above. The jig is made of two parts. The first is an auxiliary fence for the miter gauge. It's made from a piece of ¾" plywood. Before attaching the fence to the miter gauge, I laid out and cut two ¼"-wide notches in one edge. The notches are spaced 1½" apart. (This is how far apart the notches need to be on the assembly jig.)

The jig can then be attached to the miter gauge with screws so that the inner notch is aligned with the dado blade. The second part of the jig is an indexing pin. It's a short piece of ¼"-dia. dowel. The dowel is slipped into the outer notch. A round dowel makes it easy to slip the workpiece on and off the indexing jig.

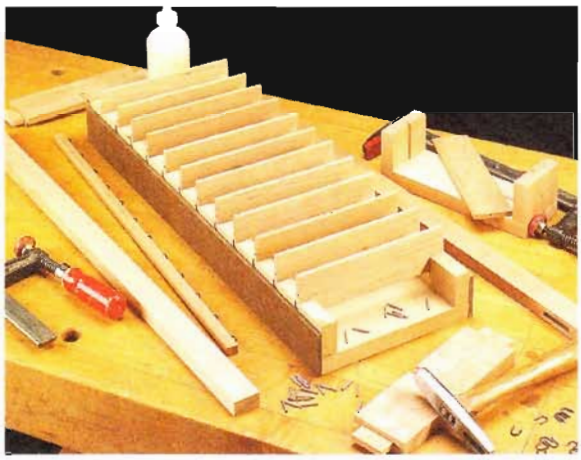

To cut the notches in the sides for the assembly jig, slide the workpiece against the dowel and cut one notch. Now move the workpiece over and slip the notch over the dowel. After cutting the notches in one side, flip the piece over and cut the other side. Then rip the blank to width to make the jig.

Bert Drost
Des Moines, Iowa

Win This Bosch *Impactor* Driver

That's right, send us your favorite shop tips. If your tip or technique is selected as the featured reader's tip, you'll win a *Bosch* impact driver just like the one shown here. To submit your tip or technique, just go online to *woodsmith.com* and click on the link, "SUBMIT A TIP." You can submit your tip and upload your photos for consideration.

The Winner!

Congratulations to Art Outlaw, winner of the *Bosch Impactor* driver. To find out how you could win a *Bosch* driver, check out the information on the left.

Quick Tips

PANEL SPACERS

When assembling raised panel doors, I always used commercial spacers that keep the panel from rattling. Recently I ran out of the spacers, but happened on an alternative that works even better.

I found that the loop side of a hook and loop fastener works much better for spacing panels, for a couple of reasons. First the closure usually has adhesive on the back, so it stays secure in the groove during assembly. And the soft loop material has just enough give to allow for expansion with changes in humidity.

Howard Huisingh
Hudsonville, Mississippi

SAFER PUSH STICKS

It's important for push sticks to have a firm "grip" on a workpiece as you push it across a router table or table saw. To keep smooth plastic push sticks from slipping, I add self-adhesive sandpaper to the shop-made or purchased push sticks that come into my shop.

Richard Gaudreau
Sanford, Maine

BAND CLAMP STORAGE

Band clamps come in handy for gluing up mitered frames and boxes. The problem is they are hard to store and most times become tangled. But I've found they fit perfectly in a plastic food storage container and stack neatly too.

Curtis Clark
Elk Grove, California

all about

7 do-it-all Knock-Down Fasteners

Most projects are assembled once and, with luck, forever. But sometimes, this isn't the most practical way to put a project together. With the lifestyle that many people live today, a project can often do a lot of traveling — from room to room, floor to floor, or even from home to home. So sometimes it makes sense to take this mobility into account by incorporating knock-down (KD) hardware into the design.

Today, there's a wide range of knockdown fasteners available — from simple to sophisticated — that give you lots of quick, easy building and assembly options. Here's a look at a good sampling.

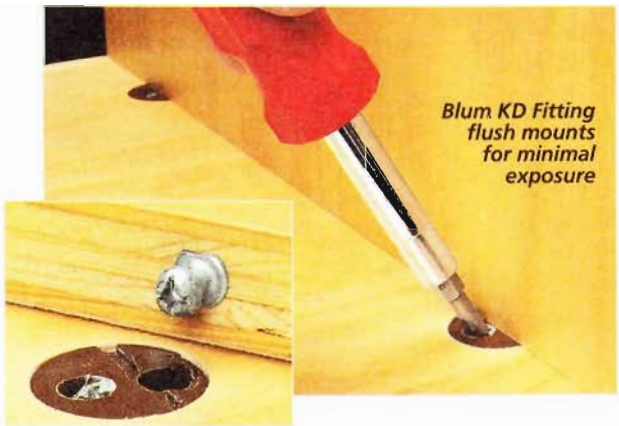

1 Blum KD Fittings

One of the best options I've found for knock-down case construction is the *Blum KD Fittings* shown in the photos at left. The installation is very straightforward, they have excellent holding power and, as you see at left, the installed fitting hardly shows.

The two-part fitting consists of a 1"-dia. plastic, press-in housing and a connector screw. The housing is inserted into a hole drilled in the support panel while the connector screw is set into the end of the intersecting panel (inset photo, left). When you turn the locking screw on the surface of the housing, an internal metal cam engages the head of the connector screw, pulling the two pieces snugly together.

2 Surface-Mount Connectors

When appearance or possible obstruction is not quite as important, the surface-mount panel connectors shown at right might be the ticket. The big advantage to using this fastener is that the installation requires nothing more complicated than drilling pilot holes for the mounting screws.

The locking plate is positioned and screwed to one panel. The housing is installed on the second panel to fit over it. A screw on the housing turns an internal cam that locks the two panels tightly in place.

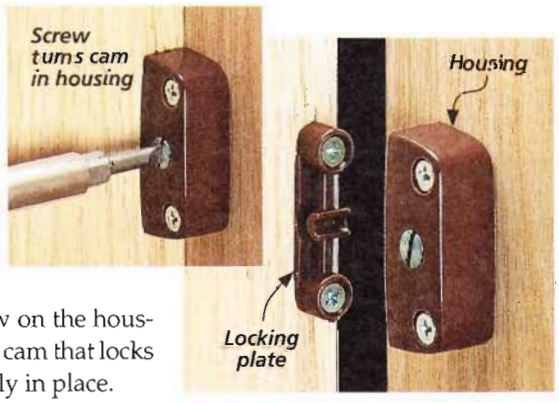

3 Metal Biscuit Fasteners

Metal biscuit fasteners offer a slick and unique way to create a strong, hidden knock-down joint. They're easy to install and are a great choice for KD table frames or even cabinet bases.

The fastener consists of two "biscuit halves." Each half holds a pair of tabs that, when engaged, form a rigid, locking joint.

To install the fastener, you fit the halves into #20 biscuit slots and then anchor them with screws. They can be engaged or disengage easily with a simple sliding action, as in the inset photo at right.

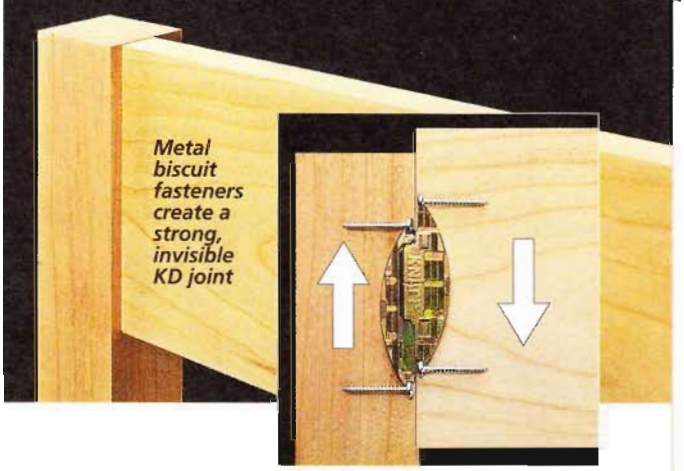

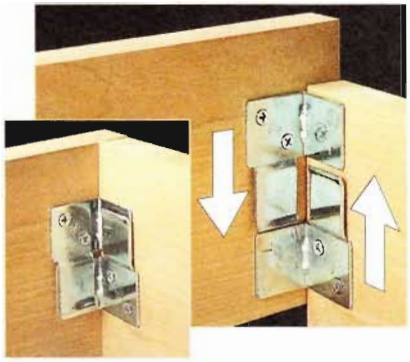

4 Corner Joiners

When quick and effortless knock-down assembly and disassembly are a priority, these simple metal corner joiners should be at the top of your list. They're the perfect solution for KD cabinet bases, simple, utilitarian casework, or modular storage projects.

The joiners come in right-hand and left-hand pairs for use in opposite corners of an assembly. You simply locate and screw one half of each pair to the mating pieces. Assembly is accomplished by sliding the parts together to engage the interlocking flanges.

5 Tension Rod Nuts

Tension rod joinery isn't a new idea. It's an often-used method for large trestle construction and other heavy-duty KD applications. But there is a new twist — tension rod nuts available from *Lee Valley*. They offer a more stylish, easier-to-use, and stronger option for this type of joinery, as demonstrated in the photos at right.

The large nuts are used in conjunction with a section of threaded rod. Tightening holes around the rim of the nut along with a tensioning lever allows you to apply considerable torque at assembly.

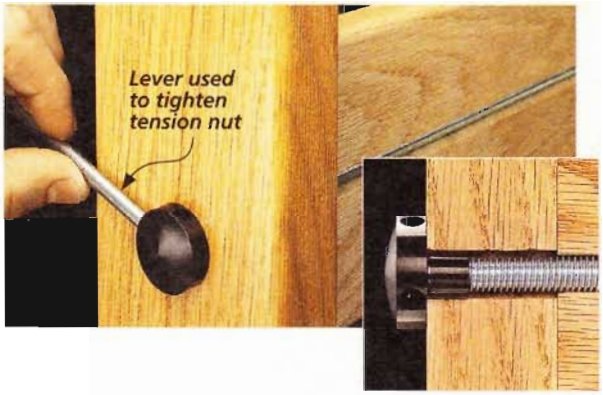

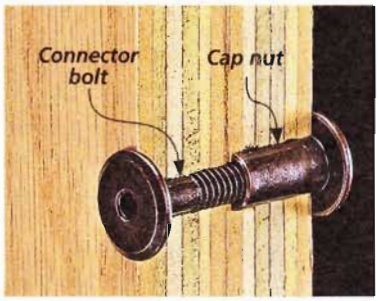

6 Connector Bolts

You'll always find a good selection of connector bolts along with the mating cap nuts in my hardware cabinet. This combination is the perfect choice for solidly fastening the individual sections of a modular cabinet together.

The idea is that the connector bolt mates with the counterbored cap nut so that both parts snug up tightly on the surface. The large, flat Allen-drive head provides an abundance of holding power without being obtrusive.

7 Cross Dowels

Steel cross dowels are pretty simple in concept. As you can see at right, they work by providing a solid, but inconspicuous, anchor point for a connector bolt. This allows you to create very rigid, right-angle KD joints.

You can see how this works in the inset photo at right. The tapped cross dowel is inserted into an intersecting hole in the surface of the horizontal piece. A connector bolt threads through the cross dowel and is tightened down to snug up the joint. They can be used effectively on both casework and frame-type construction. W

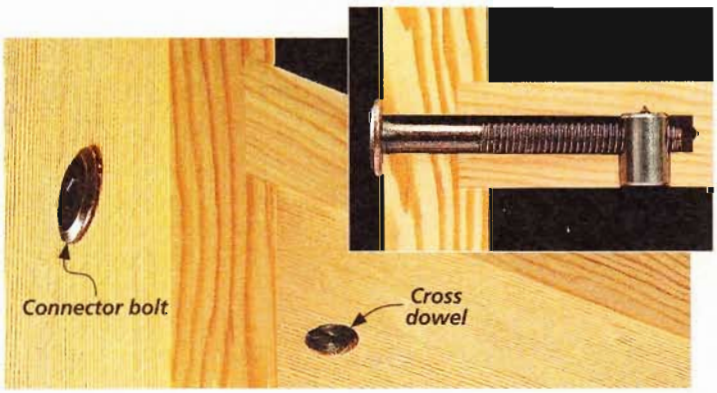

shop secrets to a Smooth Surface

Forget the sandpaper. Take a look at a couple of scraping tools that take the work out of creating a smooth surface on your projects.

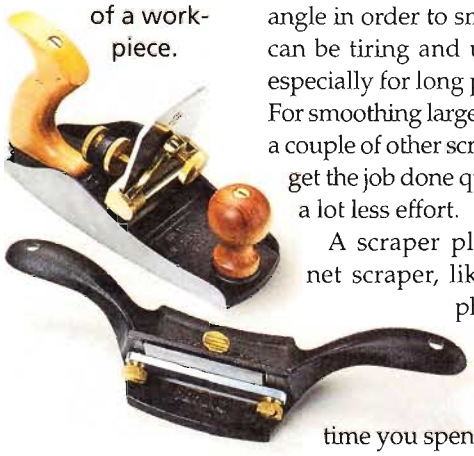

A scraper plane (top) or cabinet scraper (bottom) will make quick work of smoothing the surface of a workpiece.

A hand-held scraper is a great tool for creating a perfectly smooth surface on a workpiece in preparation for finishing. But flexing and holding a hand scraper at the correct angle in order to smooth a surface can be tiring and uncomfortable, especially for long periods of time. For smoothing large areas, there are a couple of other scraping tools that get the job done quickly and with a lot less effort.

A scraper plane or a cabinet scraper, like those in the photo at left, can dramatically reduce the amount of time you spend sanding your projects. They work especially well on highly figured woods that are prone to tearout from planers, jointers, and other power tools. And as an added plus, these tools are a lot more comfortable to use than a traditional hand scraper.

CABINET SCRAPER

Cabinet scrapers are among the simplest of scraping tools. For years, the standard for cabinet scrapers has been the classic *Stanley* #80 scraper. Essentially, it's nothing more than a holder for a hand (card) scraper. It features two wing-style handles and a simple clamp to hold the scraper blade in place. A thumbscrew is tightened to flex the blade, saving wear and tear on your thumbs (photo at right).

Although *Stanley* still makes this tool, in recent years other manufacturers have come out with their

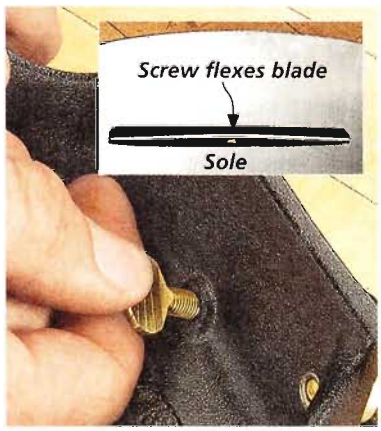

Tightening the thumbscrew on a cabinet scraper flexes the blade to take a deeper cut.

own versions, improving upon the original design. The cabinet scraper shown in the photos on the opposite page is made by *Veritas*. (See page 51 for sources.)

Aside from preventing fatigue, one of the advantages of a cabinet scraper over a hand scraper is that it has a flat sole. This makes it easier to control the scraper and maintain a consistently flat surface as you're smoothing a workpiece.

Cabinet scrapers are designed to hold the scraper blade at a single, fixed angle. This is fine for most scraping tasks. But for a little more versatility, you might want to take a look at a scraper plane.

SCRAPER PLANE

If you do a lot of scraping, or frequently work with figured woods, then you'll probably want to consider a scraper plane. Scraper planes come in a few different sizes and designs. The large plane shown on this page is the *Lie-Nielsen* #112, based on another classic *Stanley* design. (*Veritas* also makes a similar scraper plane.)

With traditional knob and tote handles, a scraper plane looks and feels more like a conventional bench plane. But unlike a bench plane, a scraper plane holds a thick scraper blade instead of a plane iron.

The blade is nearly 3" wide, allowing you to work even large surfaces quickly. Combined with the mass of the plane, this tool works almost effortlessly, making it the perfect choice for tasks like smoothing a large tabletop.

SCRAPER BLADE. Unlike hand scrapers and cabinet scrapers, the thick blade of the *Lie-Nielsen* scraper plane isn't designed to be flexed or bowed in use. Instead, the large brass thumbscrew simply clamps the blade in place.

In addition, the blade can be sharpened with or without the customary burr on the edge. It's actually a little easier to control the scraper plane without the burr. Once you have a feel for the plane, you can add a burr to the edge for a more aggressive cut.

The goal when using a scraper plane is to take thin shavings. To set the blade depth, just loosen the thumbscrew slightly and slip a sheet of paper under the front of the plane. Then tighten the thumbscrew against the blade (photo at right).

ADJUSTABLE ANGLE. The biggest advantage of a scraper plane, however, is the fact that the blade angle is adjustable. Depending on the task at hand, the blade can be set anywhere from a vertical position to leaning forward 25°. (See the How-To box below for more.)

Whether you choose a cabinet scraper or a scraper plane, I think you'll find either of these tools a big step up in performance from traditional hand scraping. W

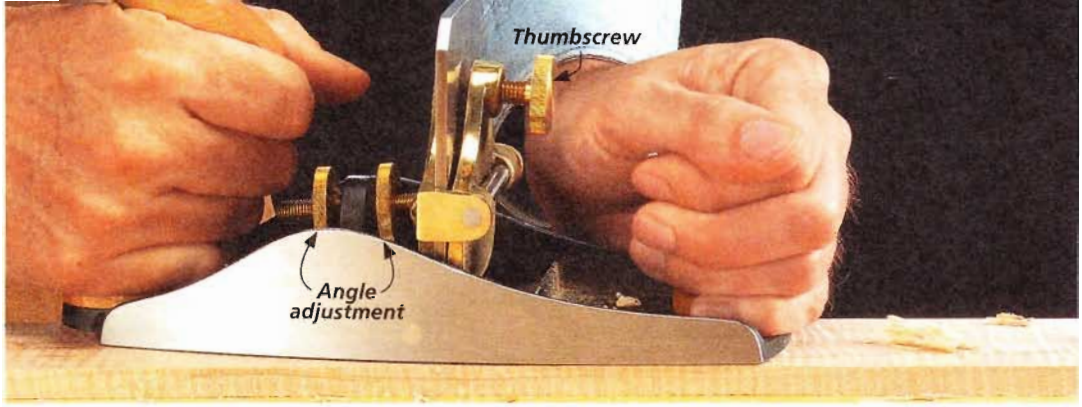

▲ A scraper plane is ideal for working highly figured woods.

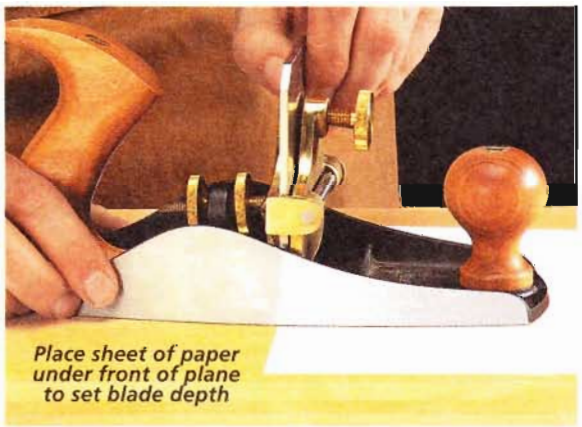

▼ A sheet of paper can be used to set the blade depth.

How-To: Set the Correct Angle for the Job

One of the best features of the large scraper plane shown below is the ability to change the angle of the blade for different tasks.

At the factory, the blade is set so it angles forward about 15° from the vertical position (left photo below). This results in a smooth cut with short, paper thin shavings. I use this angle for cleaning up machine marks on straight-grained wood.

Tilting the blade forward even more will take a deeper cut (center photo). This angle will produce long curls, almost like a low-angle plane. You could use this angle for smoothing an uneven surface, like a glued-up tabletop.

Setting the blade to a vertical position decreases the depth of the cut (right photo). This will produce fine scrapings, almost like sawdust. I use this setting when smoothing wood with highly figured grain.

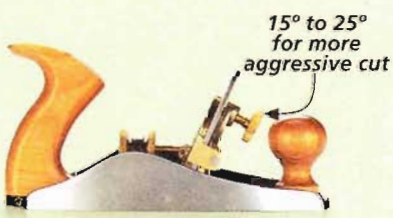

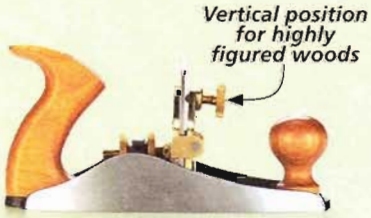

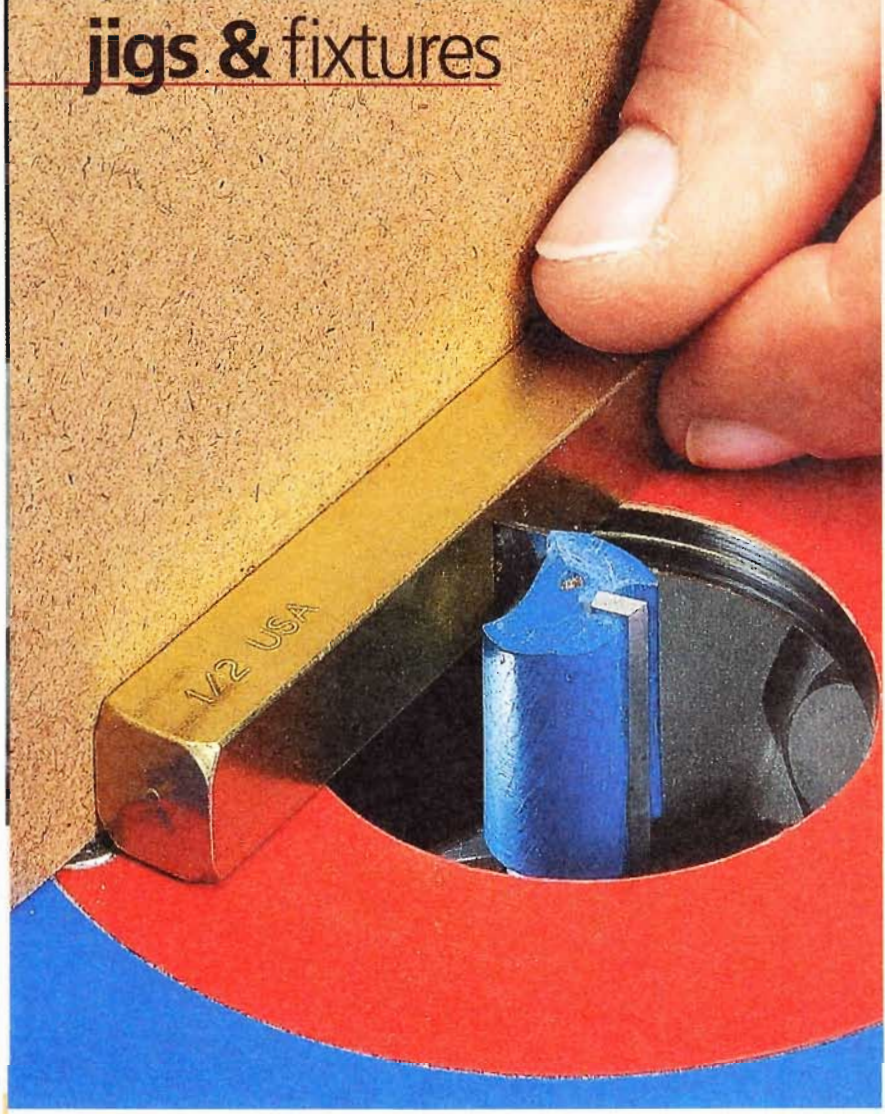

precision Brass Set-Up Blocks

Accuracy in the shop is easier with the right set-up tools at your fingertips.

Power tools are great when it comes to consistent, accurate results. But every power tool requires some sort of setup to get those results. A square and a ruler are often all you need. But it's easy to misread a ruler when you're setting up tools, bits, and blades. To get around these problems, I rely on almost foolproof machinist's set-up blocks.

ACCURACY IN THE SHOP. Set-up blocks have been used by machinists for years. They're more commonly called gauge blocks in a machine shop. But they have a lot of uses in a woodworking shop, too.

Set-up blocks are precision blocks, usually made from brass or aluminum so they won't damage cutting edges. As you can see in the photo below, a set typically consists of five different sized blocks (⅛", 3/16", ¼", ⅜", and ½"). For other sizes that you may need you can combine two or more blocks. The nice thing about set-up blocks is that there's no measuring involved. You simply use them as gauges to check distances and set up bits, blades, fences, and other tools.

Brass set-up blocks are commonly available in 2½" and 4" lengths.

Three set up blocks can be stacked together to get the right measurement for the task at hand.

Set-up blocks are especially handy where space is limited or the area you're working in is obstructed. If you have a job that requires precise setups even in an accessible area, I think you'll find set-up blocks a must-have.

ROUTER SETTINGS. Set-up blocks are great tools for using when setting up a router, whether it's mounted in a table or hand-held. If you need to set the distance of the router table fence from the bit, set-up blocks are pretty handy, as shown in the main photo on the opposite page. I like to use the long set-up blocks on the router table, so they reach across the opening in the insert. You can use the blocks to set the height of the router bit too, as shown in the lower photo on the opposite page. I place an extra block over the top of the bit and raise the bit until it grazes the bottom of the top block.

BLADE HEIGHT. These blocks also work well for setting the height of a standard table saw blade or dado blade, as shown in the photo below. You can just grab a plainly marked block or two for an exact measurement and raise or lower the blade until the highest tooth is flush with the top of the blocks. Again, if you add a block to go across the top of the blade, you can raise the blade until the teeth of the blade just graze the top block.

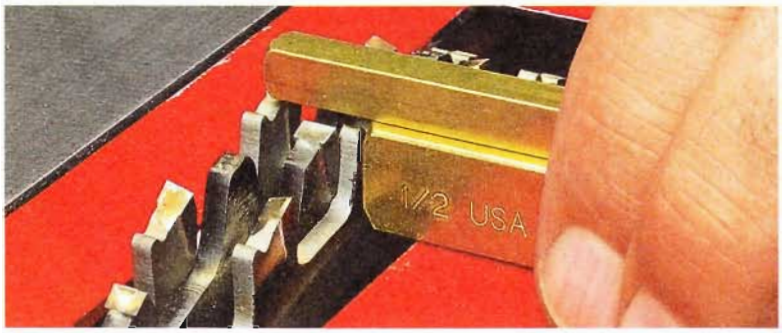

An extra block on top of the measuring block acts as a stop so that you can see exactly how high the dado blade is set on the table saw. Clear markings on the blocks are easy to read.

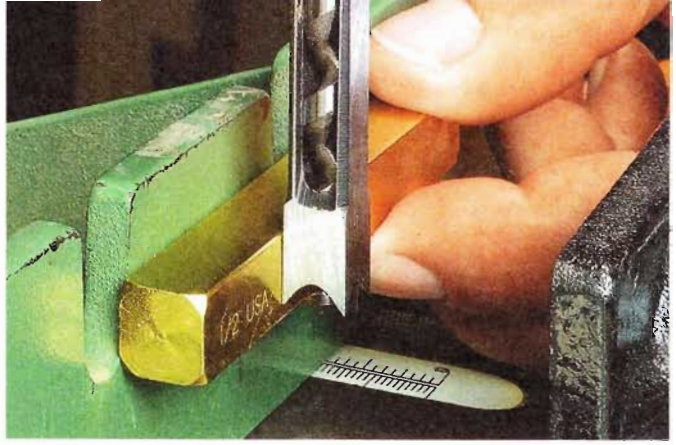

Squaring the chisel and setting the distance from the fence on a mortising machine can be done in one step with a set-up block.

MORTISING MACHINE. I also use my set-up blocks to square the chisel on my mortising machine (above photo). This way, I can set the chisel square to the fence and set the distance from the fence to the chisel in one easy step. For example, if I need to cut a mortise ½" from the edge of a workpiece, I can use the ½" block to square the chisel and set the fence. Then all I need to do is place the workpiece in the machine and cut the mortise.

If you've never used set-up blocks before, I think you'll find they can be invaluable tools in the shop. Plus, they won't set you back a lot of money — you can purchase a set for less than $15. For information on where to find them, refer to Sources on page 51. W

A Step Up: *Veritas* Set-Up Blocks

Lee Valley offers set-up blocks made by *Veritas*. These anodized aluminum blocks range in size from 1/16" to ¾". They're clearly marked on the face for easy use.

Just like the brass set-up blocks, these aluminum blocks won't dull the cutting edges of your blades and bits. Plus the anodized aluminum surface is extremely hard so the blocks are practically impossible to scratch or dent. So the blocks will maintain their accuracy for years to come. The black anodized surface also makes a good contrast when it's placed against tool edges.

In addition, the *Veritas* set includes a 1-2-3 block. This precision ground steel block gets its name from its dimensions: 1" x 2" x 3". The block is a machinist's tool that is also useful in the woodworking shop. Used in combination with the small blocks, you can measure up to 4 11/16" with the set.

An added convenience of the 1-2-3 block is the machined holes. Some of these holes have been drilled out to reduce the weight of the block. But others have been machined to hold a cap bolt for anchoring to fixtures in the shop. I like to use this block to position multiple workpieces for repetitive drilling tasks on the drill press table. It will bolt to any steel machine table.

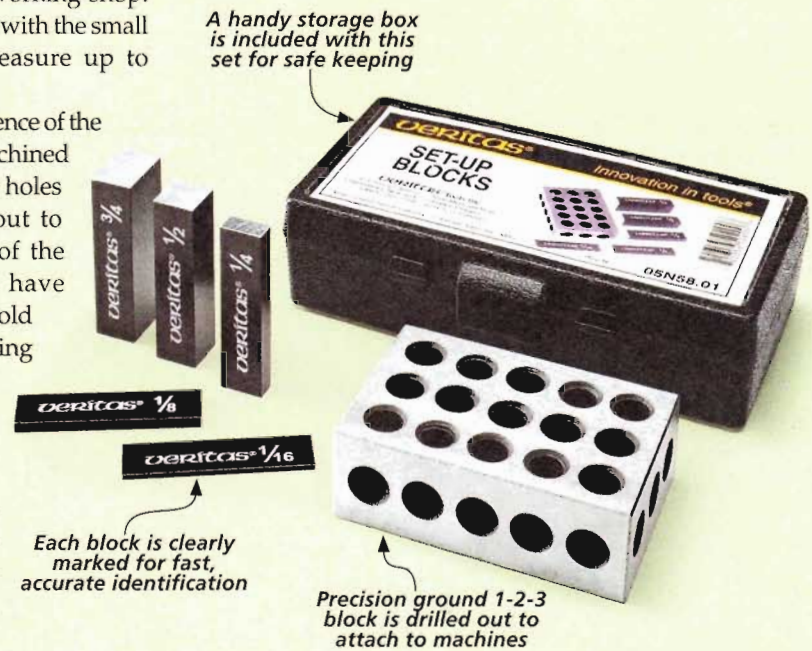

table saw tricks for Making Vertical Cuts

Using the table saw to shape the edges of a workpiece is a snap with a couple of easy-to-build accessories and simple techniques.

A table saw sits at the center of most woodworking shops — and with good reason. It's the go-to tool for ripping, crosscutting, breaking down sheet stock, and even cutting joinery. For most of these cuts, the workpiece is held horizontally, flat against the table. But with a practical method for holding a workpiece vertically, you can use your table saw to shape its edge rather than just cut it to length and width.

The key is learning a few simple techniques and building a couple of accessories. This allows you to make raised panels, cut tenons, and the slots for splined miters. You can even make quick rabbets without having to install a dado blade.

TALL FENCE. The first step to making vertical cuts is to come up with a way to support a workpiece on edge and keep it from tipping during a cut. For this, I turn to a tall fence. An auxiliary fence to fit over your saw's rip fence keeps a large panel stable. The height of the fence also allows you to make these cuts safely by keeping your hands well away from the blade.

The design shown in the drawing at left provides a very solid fence. It attaches to your table saw's rip fence with two studded knobs that fit into threaded inserts in the back of the fence. By simply tightening the knobs, the fence becomes a sturdy fixture, ready to handle tall workpieces.

BUILDING THE FENCE. I used Baltic birch plywood for the fence, but MDF would also work well. To make your own fence, start by cutting the sides. You can make them the length of your rip fence and about 12" tall. You'll need to cut grooves in the sides of the fence to house the supports. The width

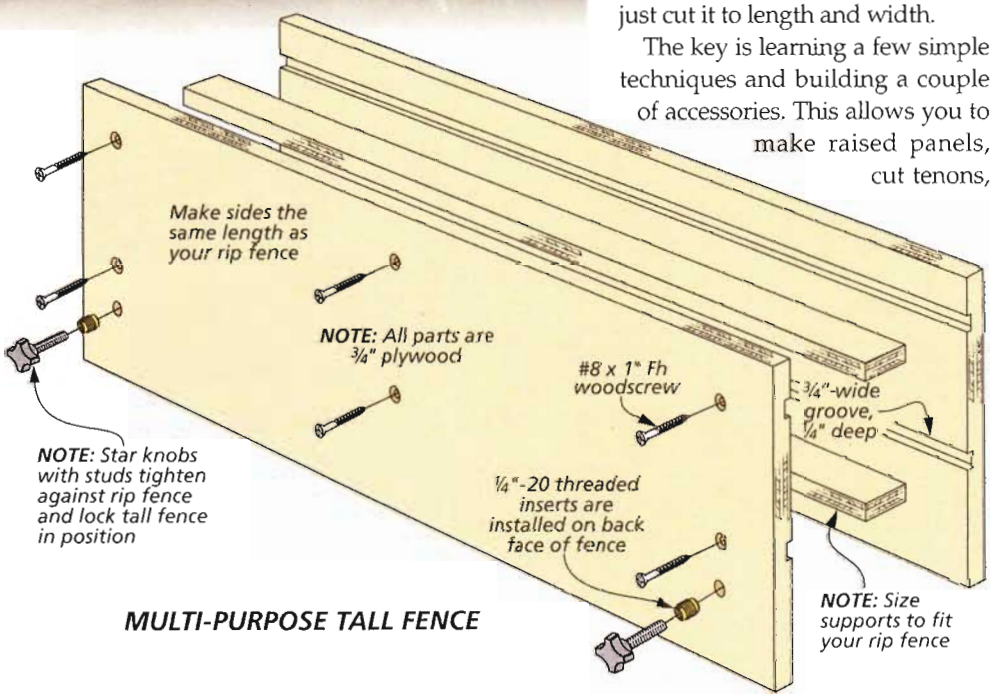

MULTI-PURPOSE TALL FENCE

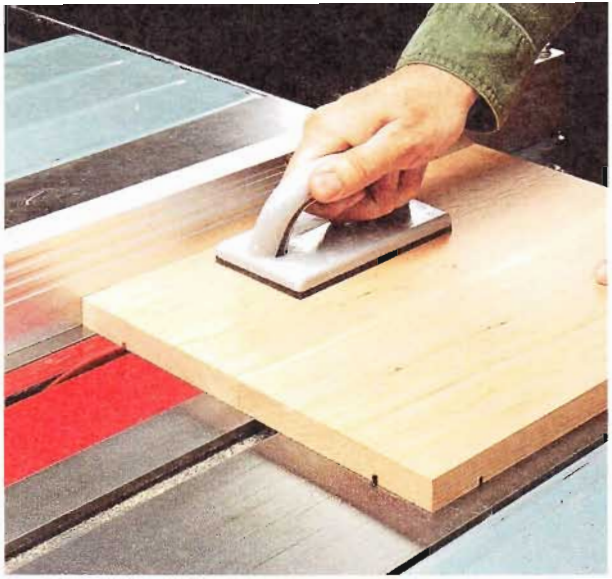

To cut the shoulder, simply set the blade height to 3/16" and position the fence to define the border of the raised field of the panel.

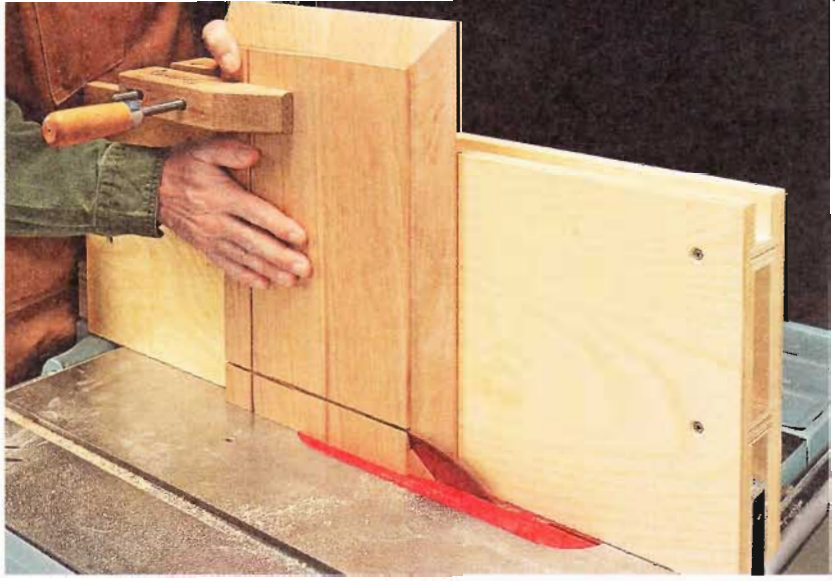

Next, set the blade angle and raise the blade to meet the kerf of the shoulder cut. A handscrew adds stability to the panel and makes it easier to control the cut.

of the supports depends on your saw's rip fence. Just size them for a snug fit. After drilling countersunk screw holes for the supports, drill holes for the threaded inserts in the side opposite the blade.

Assembling the fence with screws goes pretty quickly. I didn't use glue in the grooves just in case I need to adjust the fit after assembly. Finally, check to make sure the fence sits square to the table.

RAISED PANELS. With the fence complete, you're ready to put it to work on a project. And a good first project is making raised panels. I like this technique because it saves the cost of an expensive router bit.

The examples in the margin photos show two options. The top panel features a simple beveled edge. The lower panel defines the raised field with a shoulder. Both styles are easy to make using the tall fence.

SHOULDER. The photos above show how to make the cuts that form the shoulder. All you need to do is set the blade height to 3/16" and the rip fence to 1½" and cut along all four edges of the outside face.

ANGLED CUT. Next, install the tall fence and set the saw blade angle. I've found 10-12° is about right for this design. Then simply line up the blade and set the height to just meet the inside corner of the cut you made earlier and make the cuts.

As you can see in the photos, I like to place a handscrew at the top edge of the panel. The handscrew rides on the fence and helps keep the panel square as you make the cut.

The tall fence is a great first step in making vertical cuts. To find a simple jig for cutting tenons, slots for splined miters and more, turn the page.

A raised field (top) and one with a shoulder (below).

How-To: Cut Rabbets with a Tall Fence

With a rip blade installed and the fence and blade height adjusted to define the size of the rabbet, make the first cut.

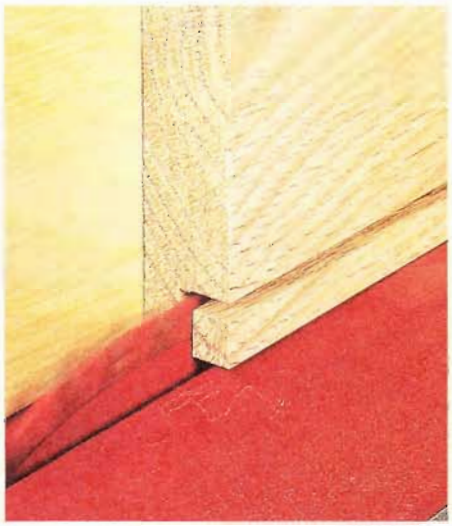

Now hold the workpiece vertically and make the second cut so the waste falls to the outside of the blade.

I usually cut rabbets using a dado blade buried in an auxiliary fence. But installing a dado blade can be time consuming. So, when I only need to cut one or two rabbets, I find it's quicker to just install the tall fence and use the two-step process shown in the photos.

You start by setting the fence to determine the width of the rabbet and then the blade height to define its depth. Next, make the first cut with the workpiece in the horizontal position. Then, flip the workpiece on its edge and adjust the fence position and blade height to meet the kerf of the first cut. Hold the workpiece vertically to make the cut and complete the rabbet.

ADD A SLIDING JIG

After making cuts with the tall fence, you can probably imagine how vertical cutting techniques can be applied to joinery. You'll find that making a sliding jig for cutting tenons and splined miters is also a great addition to your table saw.

REVERSIBLE JIG. The sliding jig shown in the illustration at right is similar to the tall fence you made earlier. But in this case, the jig slides on your rip fence instead of remaining stationary. You'll also notice a cleat on either side of the jig. A 90° cleat holds a workpiece straight and square for cutting tenons. On the other side, a 45° cleat secures a mitered workpiece while you cut a slot for a spline.

BUILDING THE JIG. The sliding jig relies on the same construction you used for the fixed, tall fence. Two plywood sides with grooves housing the two supports make up the body of the jig.

Once again, start by cutting the sides to size and then cut grooves for the supports. Next, you'll need to cut the supports to the correct width for your saw. I did this by "sneaking up" on a good fit, dry fitting the parts, and testing them on the rip fence. You want the jig to slide freely, but without any slop.

SLIDING TENON & SPLINE JIG

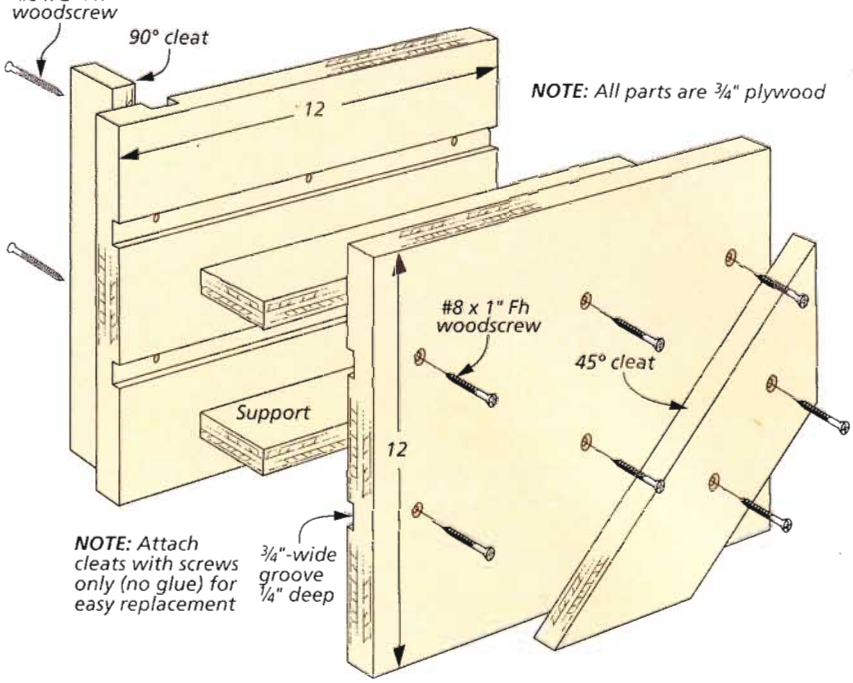

Now you can assemble the jig by attaching the supports with screws in the countersunk holes.

On one face of the jig, I cut a shallow dado and attached a cleat square to the table. On the other side (with the 45° cleat), no dado is necessary. This allows you to adjust the accuracy of the miter cut by fine-tuning the placement of the cleat. Both cleats are simply attached with screws — no glue. By not using glue, you can also easily replace the cleats when they get chewed up.

But before you attach either of the cleats, raise your table saw blade to full height and make sure to locate the screws for the cleats well above that point. Finally, I found it helpful to add a light coat of wax to the inside of the jig (the part that slides along the fence). This will keep it running smoother by reducing the friction, while still maintaining a tight fit on the rip fence.

USING THE JIG

After assembling the jig, you're ready to put it to work. It's a good idea to experiment a little bit using some scrap pieces. This way, you'll get a feel for how to align cuts to layout marks and also how to get the most out of the jig in your shop.

SPLINED MITERS. One of my favorite applications is making splined miter joints. Whether in small applications, like picture frames, or larger projects such as edging a cabinet, the perfect, seamless miter joint is a woodworking staple. But no matter how well cut, the joint is inherently weak due to its end-grain glue surfaces.

Adding a spline — a thin strip of hardwood fit into slots on the mating faces of each piece — dramatically increases the strength. But cutting a perfectly matched slot on the mitered ends of the workpieces can be a tricky operation.

That's where the angled side of the jig comes into play. By holding the workpiece at the correct angle, cutting the slot is a breeze. As you can see in the photo at left, all you need to do is position the workpiece on the 45° cleat and fasten it in position with a small clamp.

Then, using a dado blade centered on the workpiece, you can cut the slot with little chance of error. The jig also allows you to vary the dimensions of the slot. A thin spline is all you need for picture frames

The angled fence supports a workpiece while cutting slots for splines.

and other small projects, but a thicker spline will guarantee plenty of strength for heavier applications, such as a cabinet face frame.

SPLINES. For the spline, all you need to do is plane some stock to match the thickness of the slot. It's a good idea to make sure the grain of the spline is oriented perpendicular to the slot. This way, you won't need to worry about the spline splitting under pressure. Then, a little glue and clamps make for a straightforward assembly.

You can complete the joint by trimming the spline on both the inside and outside of the assembled frame with a flush cut saw and follow up with a little sanding. An example of a finished joint is shown in the inset photo on the bottom of the opposite page.

CUTTING TENONS. The mortise and tenon joint is another favorite for many woodworking projects. And there are several ways to cut tenons. One common method uses a dado blade with the workpiece held flat on the table and guided by a miter gauge. This technique is quick and reliable. But for many applications, particularly when using a through tenon, where part of the tenon is visible, the result is less than desirable. As you can see in the photos in the box below, a dado blade leaves a rough surface on the face of the tenon.

By cutting a tenon vertically using a tenon jig, you get a much smoother face. A good-quality rip blade leaves a face that seldom requires any further planing or sanding to achieve a tight fit. The smooth face provides a better surface for the glue and adds more strength to the finished joint.

Fortunately, cutting tenons is a simple operation using the jig. The box below shows the steps. The thing I really like about this jig is how easy it is to adjust the thickness of the tenon simply by moving the rip fence. The smooth tenon will result in a strong joint that lasts for years.

SAFETY. While the jigs shown here are designed with safety in mind, there's one thing to remember as you put them to use. It's a good idea to get in the habit of sliding a workpiece all the way through the cut and well past the blade before removing it from the jig. Don't just pull the jig and workpiece back through the blade. You risk catching the back of the blade and having the workpiece kick back.

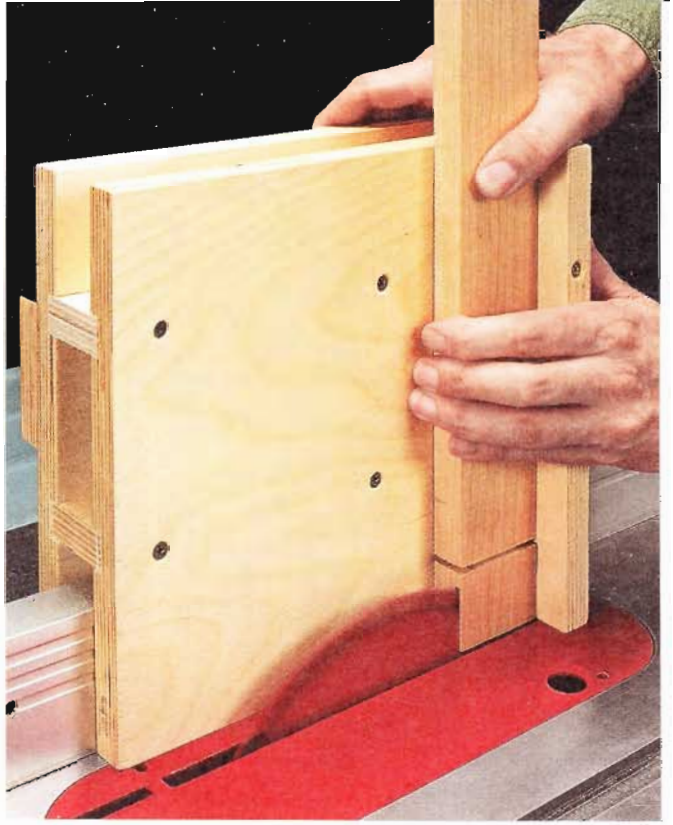

With a good-quality rip blade in the table saw, the sliding jig makes cutting smooth-faced tenons almost foolproof.

Once you get the hang of using the tall fence and the sliding jig, you'll see how easy it is to incorporate vertical cutting techniques in your future projects. You're sure to agree it was well worth taking the time to make the jigs. W

How-To: Cut Tenons with the Sliding Jig

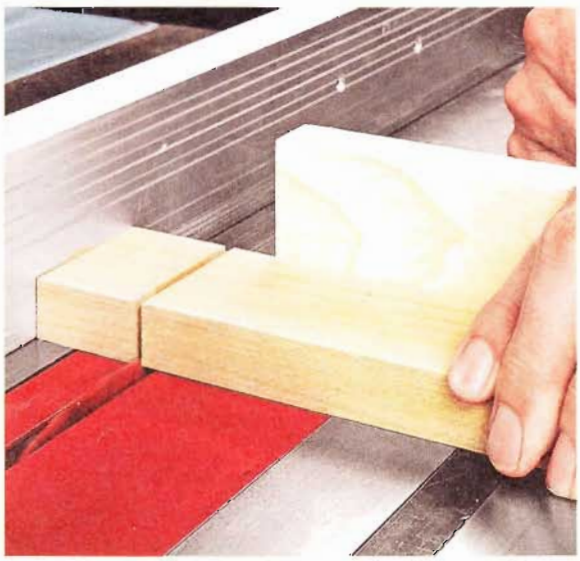

Use a miter gauge to cut a shoulder on all four faces of the workpiece to define the length of the tenon. You can use the rip fence as a stop.

Align the blade with the shoulder cut and slide the jig and workpiece through the cut.

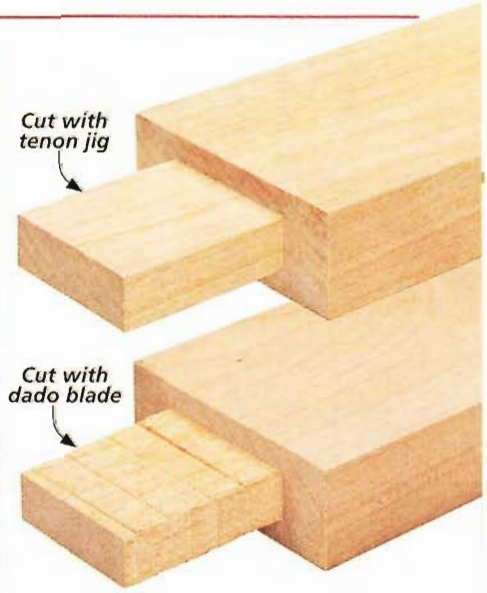

The smooth face of a vertically cut tenon makes for a stronger glue joint.

mitered Frame & Easel

Your favorite art or photograph will look great in this easy-to-build frame resting on a classic, adjustable easel.

Treasured photographs and artwork deserve a distinctive place in any home. And this frame and easel combination makes a great place to display those gems.

This project is pretty simple to build. There's no complicated joinery because both the base and the frame are built up from three separate components. The easel is nothing more than a three-tiered base with a support and clamp added to hold the frame in place. The individual components are chamfered to add to the form and character of the easel.

The frame is built by gluing the facing to a backer board and then just adding trim around the edges. The frame is also chamfered to add character and I chose contasting wood for the facing as well.

There are two sizes for this project — one for 8 x 10 photos and one for 5 x 7 photos. I've featured the 8 x 10 frame throughout this article, but I've also included the dimensions for a 5 x 7 version in the cutting diagram on page 21.

You can also build a set for an 11 x 14 photograph or art. The cutting diagram and materials list is online at Woodsmith.com.

building the FRAME

Building the frame for the frame and easel duo is pretty straightforward. To keep it simple, I eliminated the need for splines on the mitered corners by gluing the facing to a backer and then mitering the trim around the assembly. The trim has a rabbeted edge that fits tight against the facing and backer.

BACKER AND FACING. The backer and the facing are sandwiched together. The backer is ¼" narrower than the facing so that when they are glued together they form a rabbett to hold the glass and photograph or artwork in the frame.

The backer pieces are cut to size and fit with butt joints (main drawing). The facing has mitered joints and a chamfer on the inside edge. I cut the facing to width and rough length and then routed the chamfered edge (How-To box below). The facing can be mitered to length and glued together with the backer, as shown in detail 'a.'

TRIM. The trim is rabbeted to fit around the facing and backer and has a chamfer on the inside front edge (main drawing). Again, it's easiest to do this work before the pieces are cut to length, as shown in the two right drawings in the box below. I ripped an extra-long workpiece to width for all four sides of the trim. You can rout the chamfer on one edge of the workpiece and then cut the rabbet on the table saw. Finally miter the pieces to length and glue it to the backer and facing edges.

DETAILS. To finish up, you can add a piece of glass to the opening. I cut a piece of posterboard to back the photo (detail 'b'). And turnbuttons will keep the backing and your artwork or photographs in place.

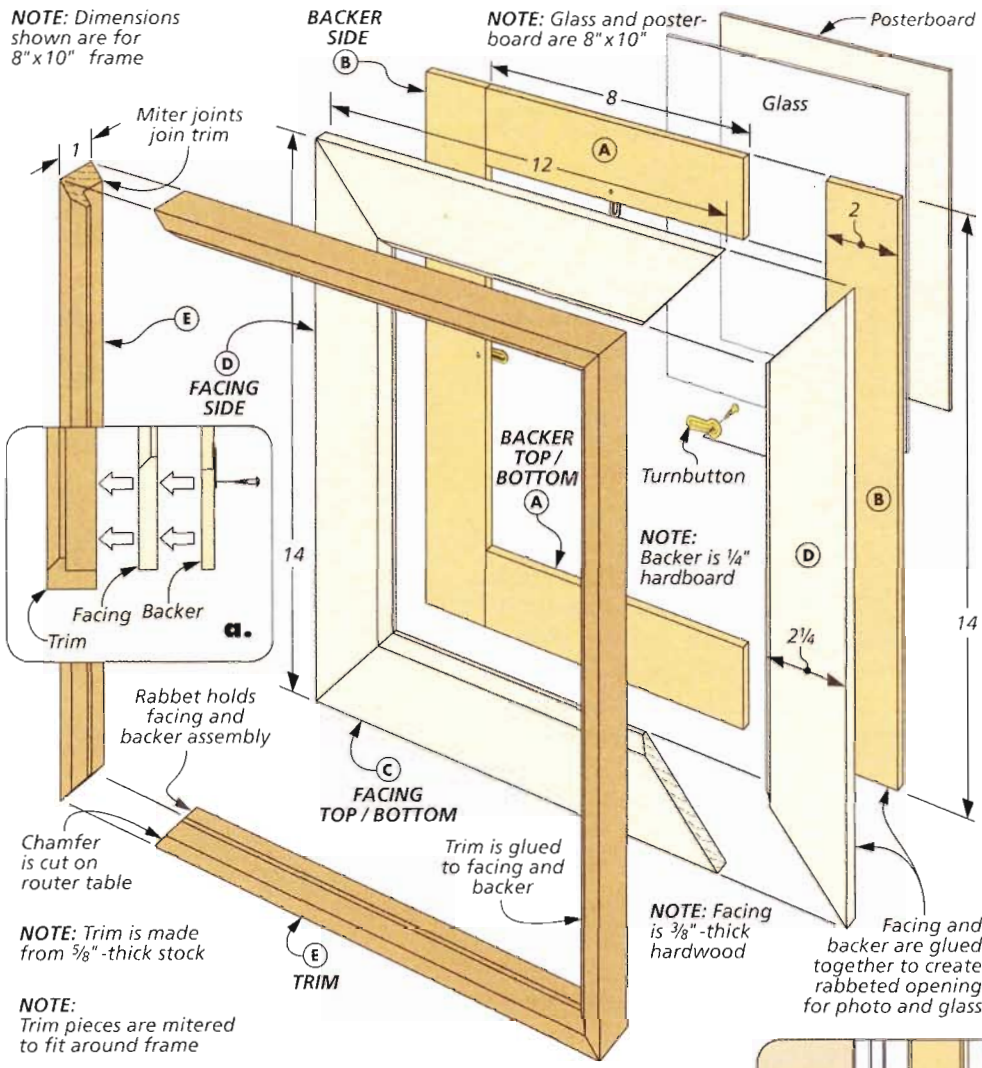

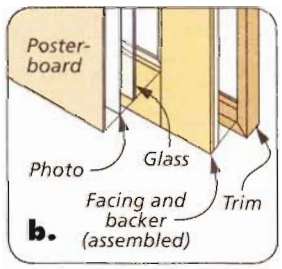

How-To: Shape the Frame Components

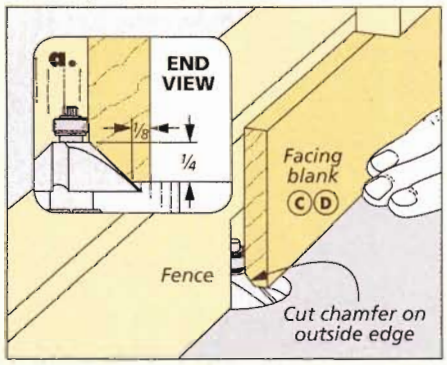

Facing Chamfer. *It's easiest to rout the chamfer on the facing blanks before mitering the pieces to length.*

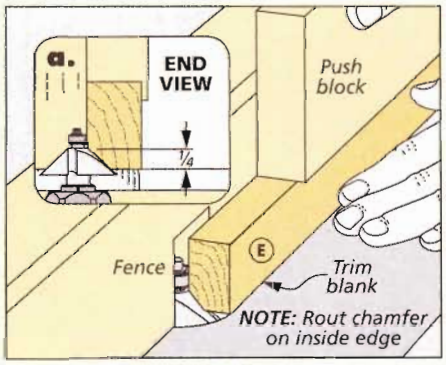

Chamfer. *To make the frame trim, start by routing a chamfer on the outside edge of an extra long blank.*

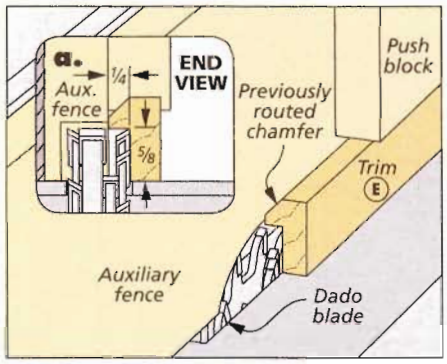

Rabbet. *Cut the rabbet on the inside edge of the trim on the table saw, using a dado blade buried in an auxiliary fence.*

adding the EASEL

The easel consists of a base and a vertical support that holds a sliding lock to secure the frame in position. The base is assembled using three hardwood blocks — each with a different edge profile. This adds weight and an intricate design to the easel. A dado in the back of the base holds the support.

BOTTOM. The bottom of the base has a wide chamfer with a shoulder at the top. You can cut the shoulder and the chamfer on the table saw. The How-To box below shows you the steps.

To define the shoulder, I cut a 1/16"-deep kerf in three sides of the top face. Then I set the saw blade at 45° and cut the chamfer on the edges of the bottom.

RISER AND TOP. The riser in the center of the base is a rectangular workpiece cut to size with the edges left square. The top piece has a 1/4" chamfer on the bottom edge. After this workpiece is cut to size, you can rout the chamfer.

BEGIN ASSEMBLY. Once you have the three base pieces cut and shaped, you can glue them up. The pieces are assembled centered from side to side, but flush at the back edge. A few brads inserted in both faces of the riser will help hold the bottom and top in place as you apply the clamps for glue up. After the glue dries, you can cut the notch on the back of the base for the vertical support on the table saw, as shown in the right photo below

STOP. A stop on the front of the base keeps the frame from slipping off. It's a narrow piece with chamfers on the edges and trimmed corners. Because the finished piece is so small, I cut the profiles on an extra wide blank. You can miter the corners first.

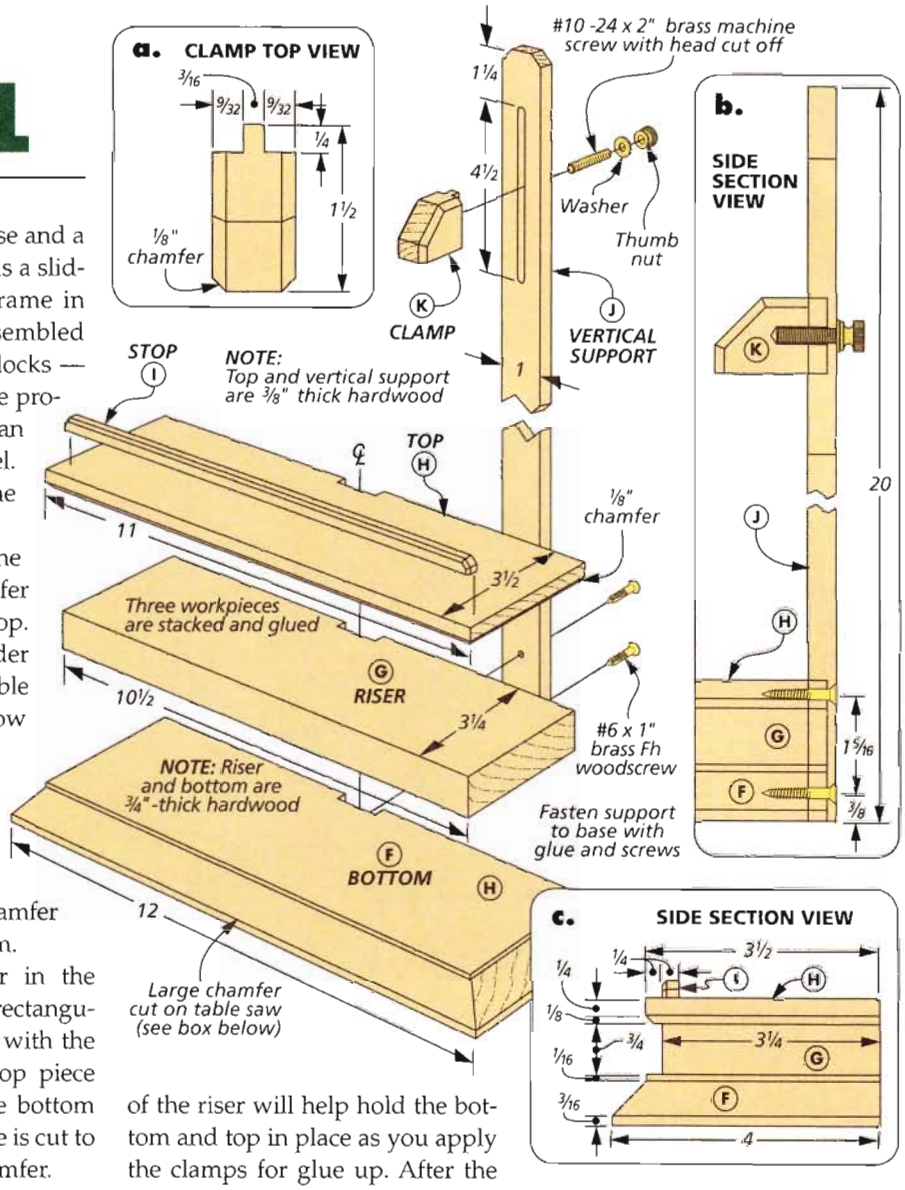

Woodsmith GO ONLINE EXTRAS

For information on building a frame and easel for an 11 x 14 photograph, visit our website at Woodsmith.com.

How-To: Shaping the Base

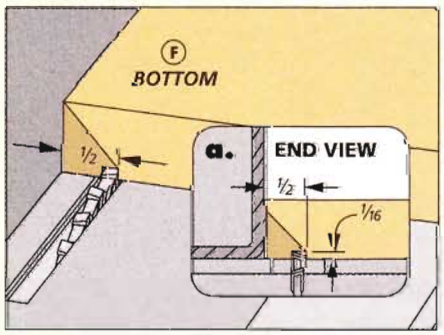

First. *To shape the chamfer on the table saw, I started by cutting a kerf 1/2" from the edge on three sides of the workpiece.*

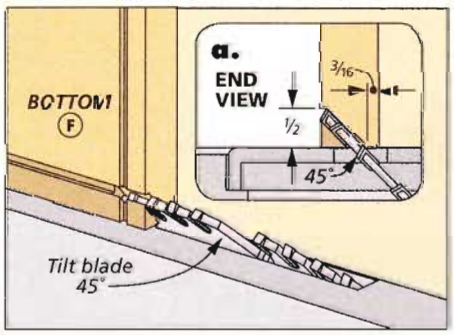

Second. *To complete the chamfer, tilt the blade 45° and raise it to meet the kerf. Then cut off the waste.*

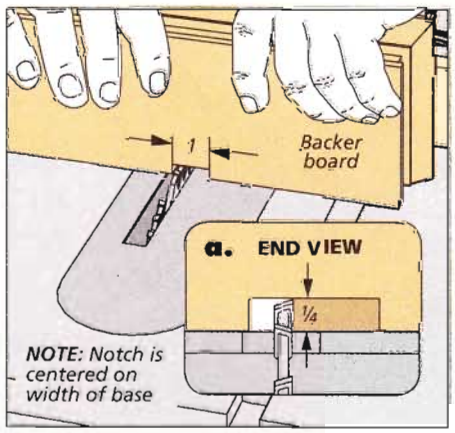

Notch. *The notch in the base that holds the vertical support should be cut after the three layers of the base are glued up.*

Then take the workpiece over to the router table and rout the chamfers on the edges. Finally rip the stop free from the waste.

VERTICAL SUPPORT. The vertical support for the frame is ripped to width to fit the notch you cut earlier. The miters on the top corners of the support are cut on the table saw. After that, it's just a matter of cutting the slot to hold the clamp and drilling pilot holes for the mounting screws in the back.

The slot in the top is made on the router table. You'll find more information in Shop Notebook on page 30. Two screws hold the support to the base as shown in detail 'b.'

FRAME CLAMP. The frame clamp is also a small piece with several short cuts and chamfers, so again, it's easier to work with an oversized blank. I cut the blank to width this time and then cut a bevel on the end of the piece. Once you've completed this, you'll need to go back to the router table to rout the chamfers on the edges. Then you can cut 9/32"-deep notches at the back of the clamp to form a tongue. Finally, cut the clamp free. There's more information in the How-To box below.

You'll need to drill a hole through the middle of the tongue on the clamp to hold the screw that attaches it to the support. This may be a challenge, but take a look at the photo below for an easy solution to this.

FINISH ASSEMBLY. The clamp is fitted with a cut off 10-24 brass machine screw. Cut the screw to 1½". A bit of epoxy on the end of the screw will hold it in place in the clamp. Then add a washer and a brass thumb nut as shown in the main drawing.

FINAL DETAILS. The easel has been designed to hold the frame either horizontally or vertically, depending on your photo or artwork. All you need to do now is to decide which photo to display. W

Since the clamp is a small piece and needs to be drilled precisely, I secured it to the drill press using a handscrew and then drilled the hole.

Materials, Supplies & Cutting Diagram

		8x10 Size	5x7 Size
A	Backer Top/Bottom (2)	¼ hdbd. - 2 x 8½	¼ hdbd. - 2 x 5
B	Backer Side (2)	¼ hdbd. - 2 x 14	¼ hdbd. - 2 x 11
C	Facing Top/Bottom (2)	⅜ x 2¼ - 12	⅜ x 2¼ - 9
D	Facing Side (2)	⅜ x 2¼ - 14	⅜ x 2¼ - 11
E	Trim (1)	⅝ x 1 - 60 (rgh.)	⅝ x 1 - 48 (rgh.)
F	Base Bottom	¾ x 4 - 12	¾ x 3½ - 9
G	Base Riser	¾ x 3¼ - 10½	¾ x 2¾ - 7½
H	Base Top	⅜ x 3½ - 11	⅜ x 3 - 8
I	Frame Stop	¼ x ¼ - 10½	¼ x ¼ - 7½
J	Vertical Support	⅜ x 1 - 20	⅜ x 1 - 17
K	Clamp	¾ x 1 - 1½	¾ x 1 - 1½

- (4) ⅞" Brass Turnbuttons w/Screws
- (2) #6 x 1" Brass Fh Woodscrews
- (1) 10-24 x 2" Brass Machine Screw
- (1) #10 Brass Flat Washer
- (1) #10 Brass Thumb Nut

For 8x10 Size

½" x 3" x 60" Curly Maple (1.3 Sq. Ft.) **NOTE:** Plane to ⅜"-thick

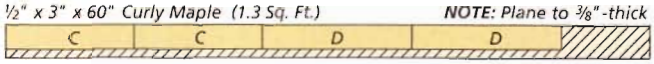

¾" x 5½" x 60" Poplar (2.3 Bd. Ft.)

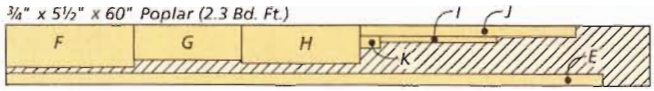

NOTE: Parts E, H, I, and J are planed to thickness.

For 5x7 Size

½" x 3" x 48" Curly Maple (1 Sq. Ft.) **NOTE:** Plane to ⅜"-thick

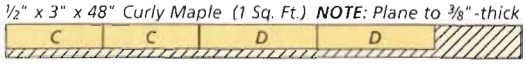

¾" x 5½" x 48" Poplar (1.8 Bd. Ft.)

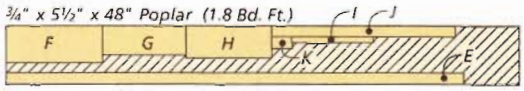

NOTE: Parts E, H, I, and J are planed to thickness.

ALSO NEEDED: One 12"x24" sheet ¼" hardboard for the 8x10 frame and a 12"x12" sheet ¼" hardboard for the 5x7 frame.

Making the Frame Clamp

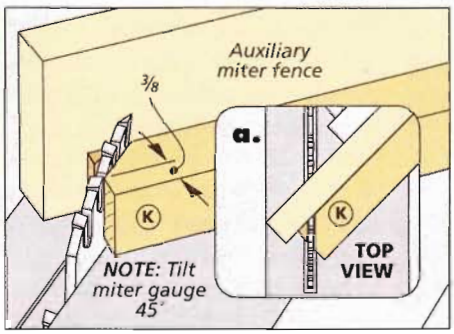

Beveled Front. *Locate the bevel on the front of the clamp by marking a point ⅜" from the bottom of the workpiece.*

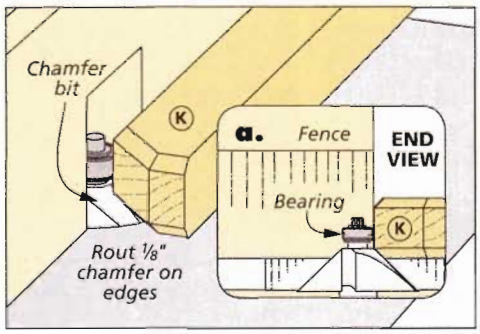

Chamfers. *The chamfers on the edges are routed on the router table. Use a miter gauge for the end and angled chamfers.*

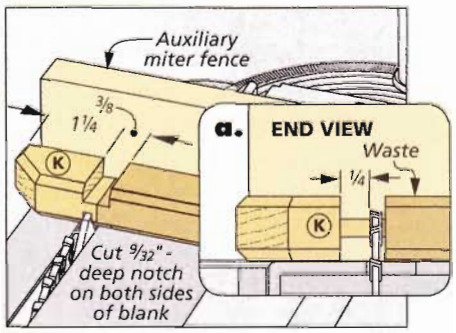

Tongue. *The final steps are to cut the notch to form the tongue on the clamp and then cut it free from the blank.*

glass-panel Coffee Table

This is certainly no run-of-the-mill project. The look is sophisticated and sleek, and the work might add a new dimension to your skills.

It's easy to get into a woodworking rut — always building in the same familiar style using well-practiced techniques. We're all more comfortable sticking to what we know.

But it can be a nice change of pace to try something different and expand your skills by tackling some "outside the box" woodworking. Building this glass-panel coffee table will definitely go a long way toward filling that prescription.

The clean, crisp lines and simple details create an undeniably striking look. The frame, with its tapered legs and slightly beveled apron, has a light, almost airy appearance. But at the same time, the impression is solid and substantial. The contrasting grids supporting the glass are an immediate attention grabber.

But upon closer inspection of the table, you come away with a couple of intriguing questions. First, you may wonder how the uniquely designed frame goes together. Well, you'll discover that the joinery used to build the frame is a bit out of the ordinary. And of course this raises the question — how do you accomplish it? When you get into it, I guarantee you'll find it's all very straightforward as well as interesting. The best way to get the full picture is to schedule some shop time.

We've even included an option on page 29 that offers an equally impressive table for a bit less work. Either way, you're guaranteed a beautiful reward for the effort.

CONSTRUCTION DETAILS

OVERALL DIMENSIONS: 43½"L x 21½"W x 18"H

Notch at top of leg wraps around corner of top frame

¼"-thick plate glass has seamed edges

Individual grids are constructed with half-lap joints

NOTE: For design option without grids, see page 29

Contrasting grids in top add visual interest

Top frame assembled with butt joints and screws

Legs cover heads of screws

Chamfers soften top edges of legs and frame

Miter joints offer seamless look

Legs glued up from two pieces of 1¾"-thick stock

Legs are tapered after assembly

NOTE: Legs are added to top frame after assembly

NOTE: For finishing information, see Sources on page 51

Hardboard spline helps align leg sections during glue up

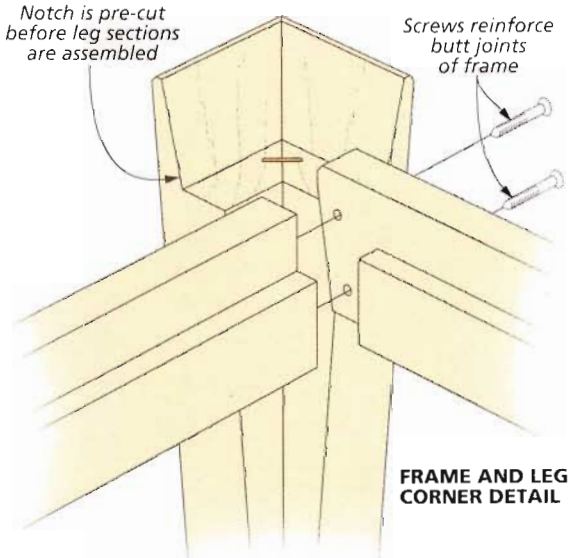

FRAME AND LEG CORNER DETAIL

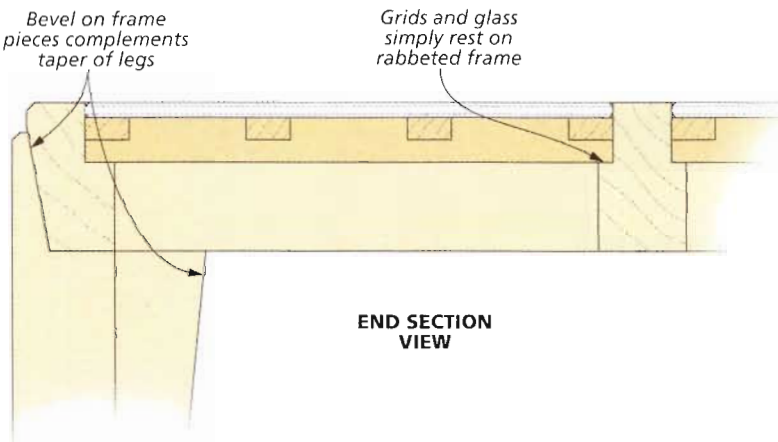

END SECTION VIEW

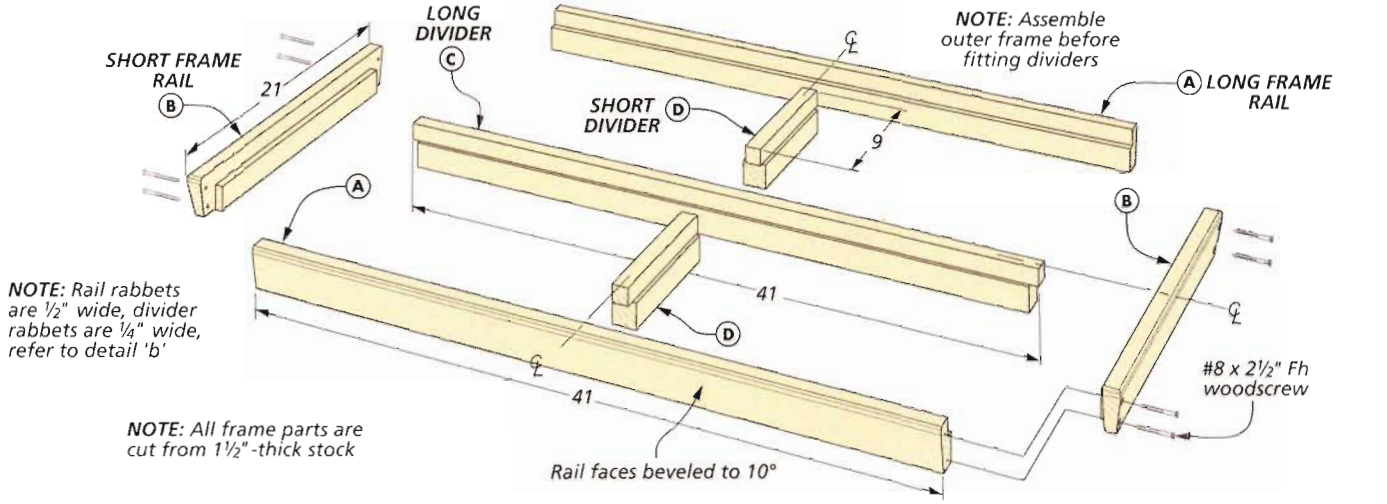

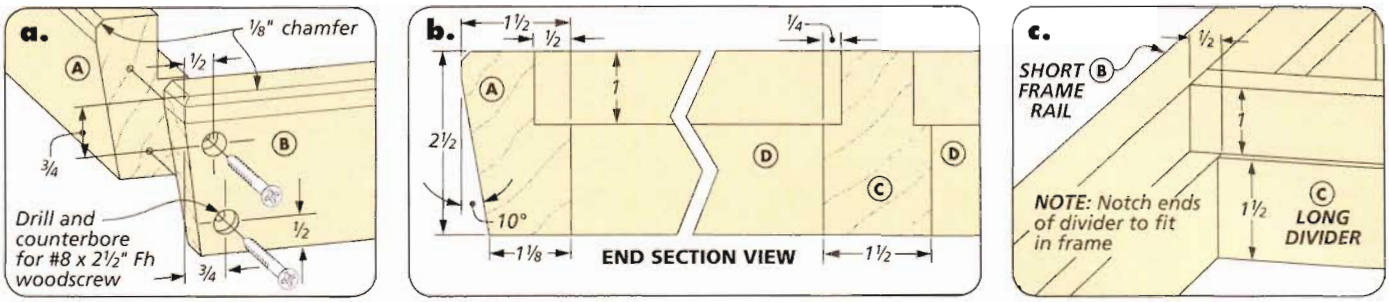

building the TOP FRAME

Before putting saw to wood, let me give you a brief rundown of the job ahead. First, you'll make the divided top frame. Then you add the legs to it. This is a bit different in that the legs are usually an integral part of the frame. Finally, you'll build the four grids.

THE FRAME. As you can see above, the rectangular top frame is made up of two long and two short rails. The frame is divided into four "grid" openings by a long divider and two short dividers. The four identically sized grids simply rest on rabbets cut into the top edges of all the frame pieces.

RABBETS. The outer frame is assembled first and then the dividers are fit inside it. So once the long and short rails are cut to width and length from 1½"-thick stock, the next step is to cut rabbets on their top, inside edges (detail 'b'). The 1"-deep rabbets will accommodate both the ¾"-thick grids and the ¼"-thick glass panels that rest on them. To ensure clean, crisp shoulders, I formed the rabbets with two passes across a standard blade, as shown in the box below.

FRAME JOINTS. The frame joinery is simple and solid. The pieces are butted in the corners and then reinforced with screws hidden later by the legs. To do this, the ends of the short rails need to be trimmed flush with the rabbet, as

How-To: Frame Rabbets & Notches

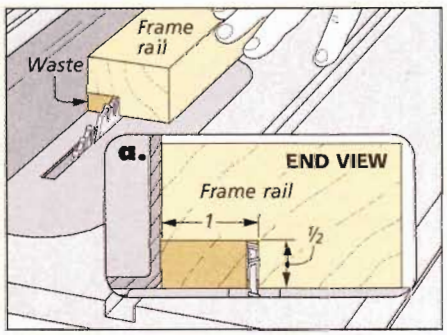

***First Cut**. Establish the depth of the rabbet with the first cut. Set the rip fence by measuring to the outside of the blade.*

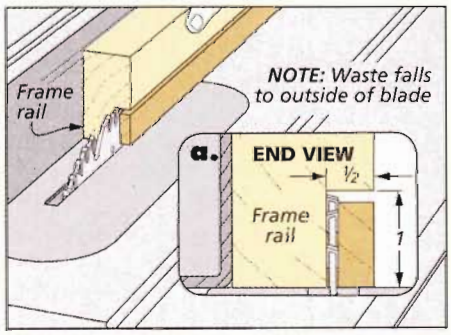

***Remove the Waste.** You'll need to raise the blade and readjust the rip fence to remove the waste with a second cut.*

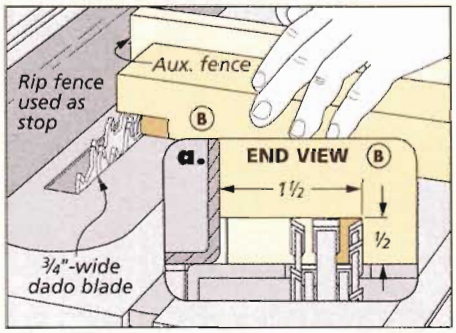

***Trim the Rails.** I switched to a dado blade to trim the ends of the short rails flush with the rabbet. Take multiple light passes.*

shown in the right drawing in the How-To box on the opposite page.

THE BEVELS. Next comes a design detail. The outside faces of the frame pieces are beveled at 10° to complement the taper of the legs. This isn't hard to do, but there is one minor complication. Due to the butt joints in the corners of the frame, the ends of the short rails will need to be beveled as well (detail 'a,' opposite page). The box at right gives you the step-by-step procedure for adding this simple profile to the frame.

A CHAMFER. After assembling the frame, there's one more thing to do before starting on the dividers. I used a palm router to add a ⅛" chamfer to the top, outside edge.

THE DIVIDING RAILS. Adding the dividing rails to the assembled frame is pretty straightforward. The important thing is to install them so that you create four openings that are identical in size.

After cutting the pieces to width and rough length from 1½"-thick stock, you can rabbet them with the same two-pass method used to cut the rabbets in the frame pieces.

The divider pieces are rabbeted on both sides (detail 'b,' opposite page). But note that the rabbets are only ¼" wide. This way, the width of the top edge of the dividers matches that of the frame rails.

A SNUG FIT. To install the dividers, I first cut the long divider to fit snugly between the shoulders of the rabbets on the frame rails. Then you'll need to notch the ends of the divider to fit over the rails and flush across the top, as in detail 'c' on the opposite page.

Now, with the long divider centered in the frame, you can fit the short dividers in the same manner. Just make sure the two short rails are exactly the same length. This will help ensure the grid openings are all the same size.

ADD GLUE. The final step is to glue the dividers in place. I used the short dividers to center the long divider at each end and then added a clamp. You can cut a couple of identical length spacers to help center the short dividers.

How-To: Frame Edge Profiles

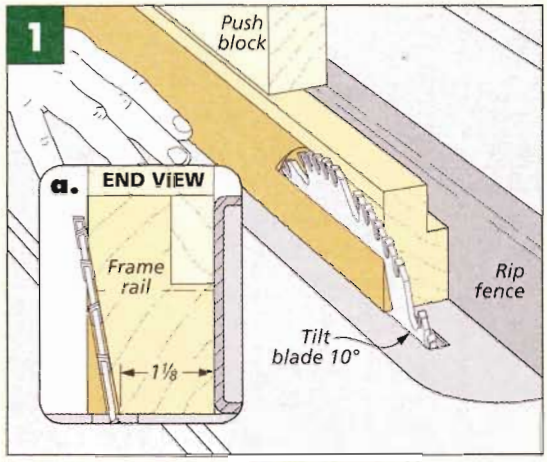

A 10° Face Bevel. *The first step is to cut a 10° bevel on the face of all four frame pieces. The bevel stops ½" below the top edge.*

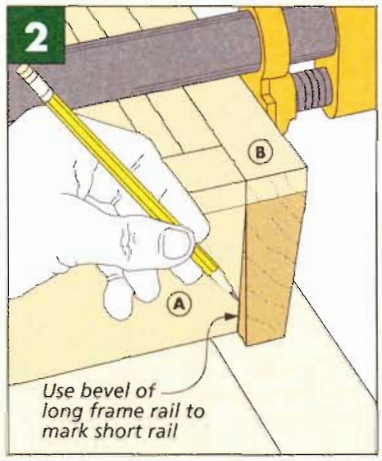

Clamp and Mark. *Next, I clamped up the frame to mark for the bevel cuts on the ends of the short rails.*

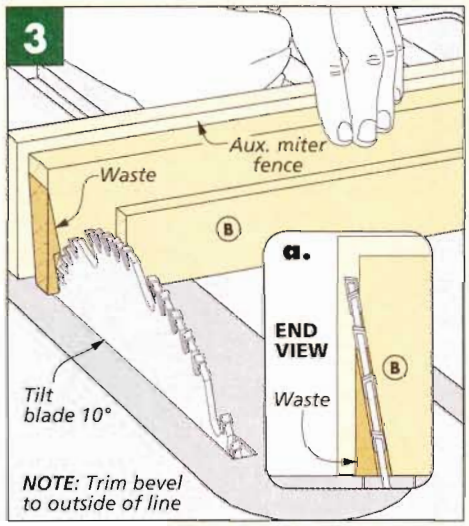

End Bevels. *With the blade still tilted to 10°, carefully make the bevel cuts. I cut to the outside of my line to allow for sanding.*

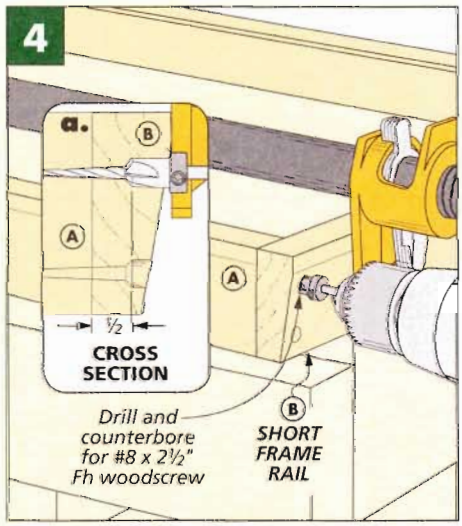

Pilot Holes. *Now clamp up the frame again to drill the counterbored pilot holes for the screws used to assemble it.*

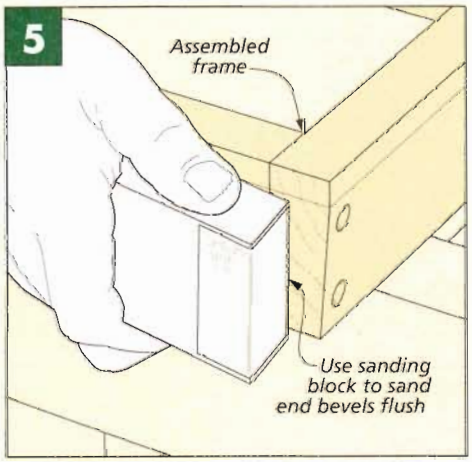

Sand Bevel Flush. *After assembling the frame with glue and screws, I sanded the end bevels flush with the surface.*

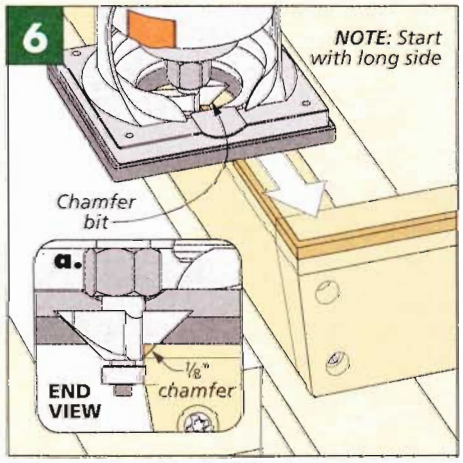

Chamfered Edge. *Finally, I used an easy-to-handle palm router to rout a narrow chamfer around the top edge of the frame.*

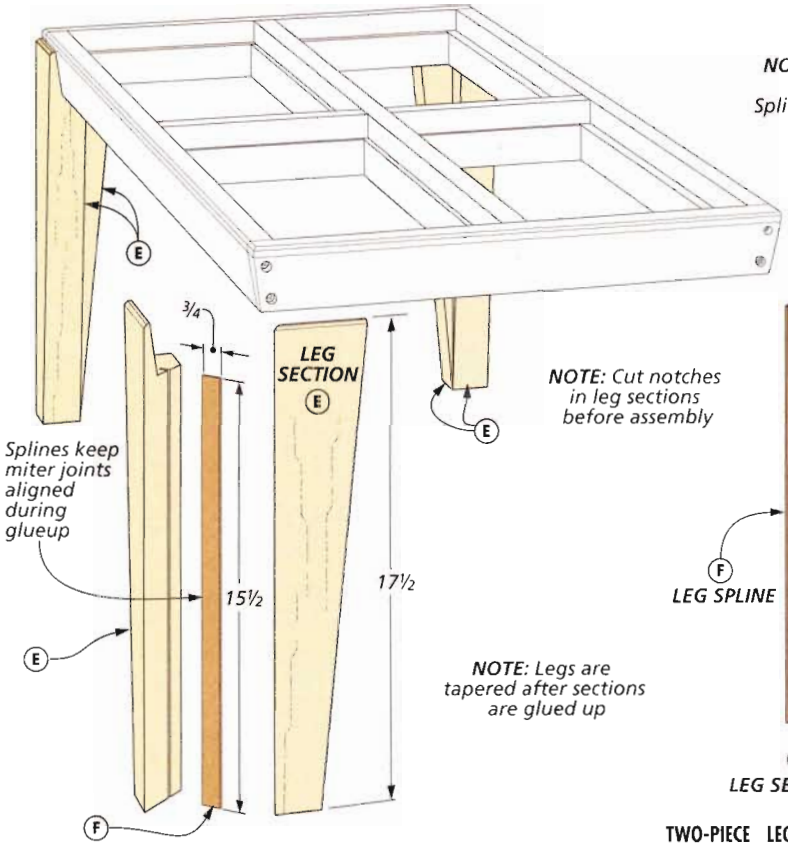

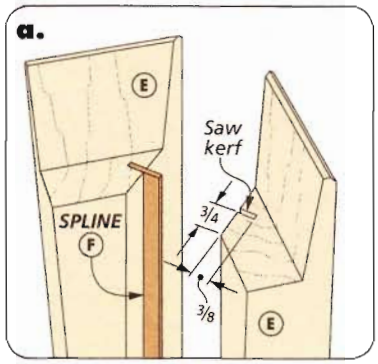

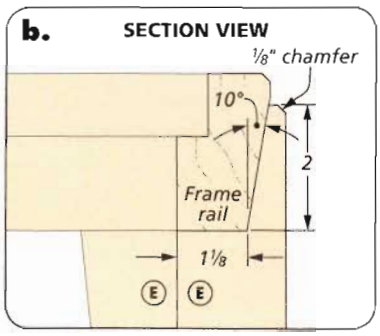

adding the LEGS

With the top frame assembled, you're ready to start on the legs. The tapered legs are unique in how they're made and attached to the frame. A large notch at the top of the leg wraps around the outside corner of the frame. This interesting design feature blends the legs into the apron in a pleasing way.

TWO-PIECE LEG. Rather than cut the legs from a solid or glued-up blank, they're made from two pieces of 1¾"-thick stock joined with a splined miter. This construction allows you to "precut" the notch at the top before the two pieces are glued together. And the appearance is crisp and seamless.

BLANKS. The drawings on the opposite page show the step-by-step procedure I followed to make the legs. Each leg starts as an extra-wide blank (about 8" wide), cut to final length. This will give you a good grain and color match between the two leg sections.

NOTCHES. Once the blanks are cut to size, your next job is to make the cuts that will form the notch at the top of the glued-up leg, as in Steps One and Two. The bottom shoulder of the notch is cut square, while the long face is beveled to mate with the beveled frame.

There are two key points to focus on here. First, you want the intersection of the shoulder and bevel cuts to form a sharp, crisp corner. So take care setting the blade height.

How-To: Clamp Up

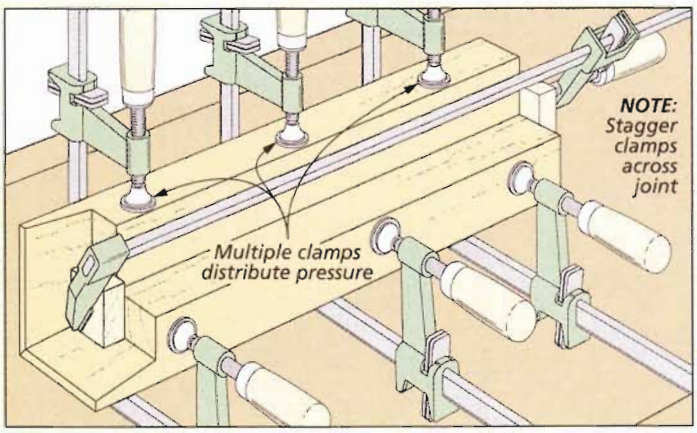

Multiple Clamps. *The key to gluing up a tight miter joint between the leg sections is to stagger multiple clamps across the faces. A clamp placed end-to-end will keep the pieces aligned.*

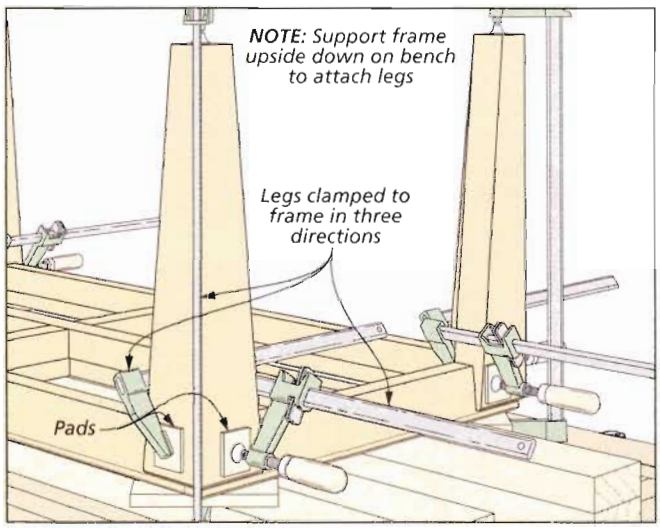

Upside Down. *Supporting the frame upside down on thick blocks will make it easier to clamp the legs to the frame. Use a clamp across each face and a third clamp top-to-bottom.*

Second, make sure the bevel angle matches (or complements) the angle on the frame rails.

The second bevel rip cut is fairly deep (about 2"), so you might get better results by removing the bulk of the waste with one pass and then resetting the rip fence and making a second "cleanup" pass.

MITERS. After completing the notch cuts, the blanks can be mitered into two sections, as in Step Three. Here, you want to make sure the miters are cleanly cut at precisely 45°. This guarantees a square notch that fits well to the frame.

SPLINES. I knew that keeping the two leg sections perfectly aligned while gluing up the miter joints would be a challenge. For this reason, I decided to add splines to the joints. I simply cut a kerf in each mitered face, as shown in Step Four, and then cut ⅛" hardboard splines to fit them.

ASSEMBLY. Once the miter joints are completed, the two sections can be glued together. The splines don't need to be glued in. Just concentrate on getting a tight, well-aligned joint. The first drawing at the bottom of the opposite page shows how I accomplished this.

TAPERS. The tapers can now be cut. To do this, I put together a table saw jig. A complication is that you can't simply rotate the leg in the jig to make adjacent cuts. The thickness of the leg and the two-piece assembly won't allow it. So the jig fence is reversible. You make one taper cut on each leg with the top facing you and then flip the leg for the second cut, as in Steps Five and Six. You'll find details on making the jig on page 31.

CHAMFER. Before the legs can be installed, you have one more task to fulfill. The final step is to rout a chamfer around the top, outside edge of each leg. This can be done at the router table (Step Seven).

INSTALLATION. Gluing the legs to the frame is pretty straightforward. The trick is to clamp them snugly in all directions. This will ensure a seamless joint. The bottom right drawing on the opposite page shows how I did this.

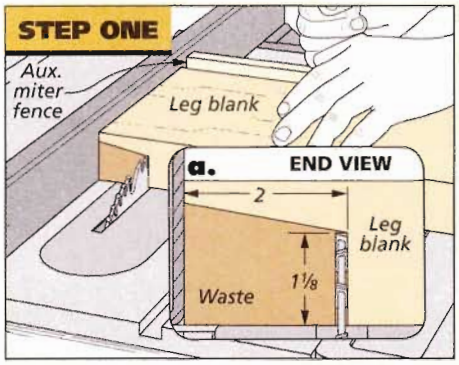

Shoulder Cuts. *Use the rip fence to position the shoulder cuts in the leg blanks. You can set the blade height with test cuts.*

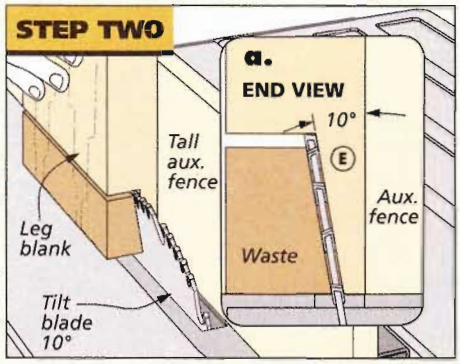

Bevel Cuts. *A tall auxiliary rip fence makes the bevel cuts go easier. Take care when setting the blade height and angle.*

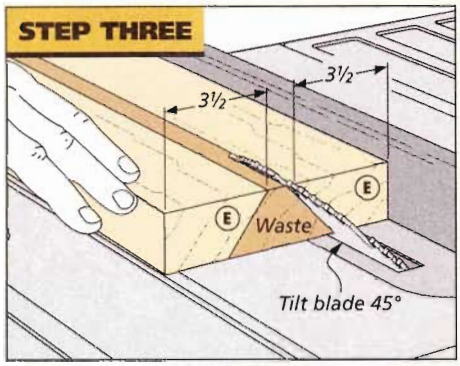

Miter Cuts. *When mitering the leg sections to final width, I made an initial "rough" pass followed by a second cleanup pass.*

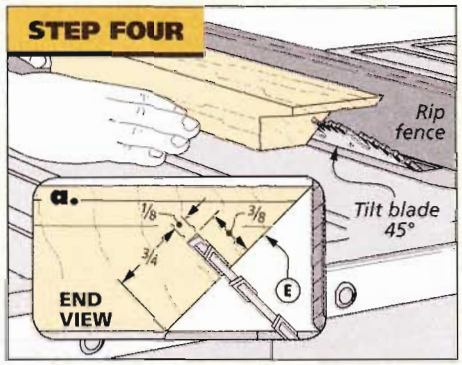

Spline Grooves. *To cut the grooves for the splines, tilt the saw blade to 45°, then use the rip fence to locate them accurately.*

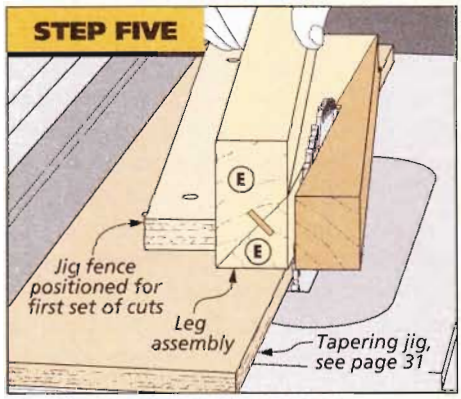

First Taper Cut. *Make the first taper cut with top of the leg facing you. The taper starts at the inside corner of the assembly.*

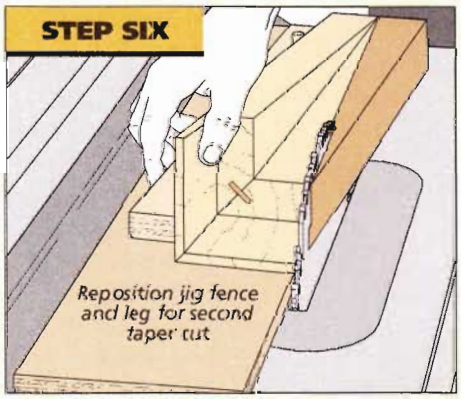

End-For-End. *To make the second set of taper cuts, you'll simply reverse the fence setup and reorient the legs.*

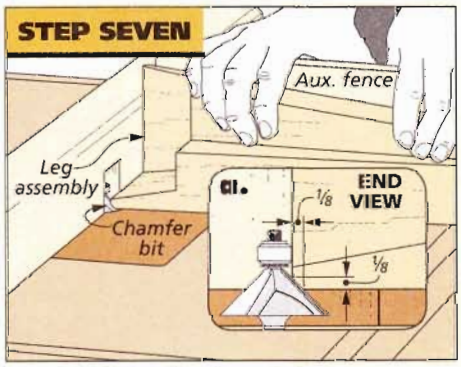

A Small Chamfer. *I used the miter gauge with an auxiliary fence on the router table to help chamfer the top of the legs.*

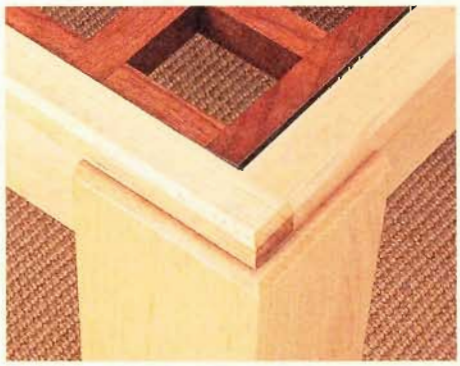

▲ The tapered leg wraps seamlessly around the beveled frame while chamfers soften the sharp edges.

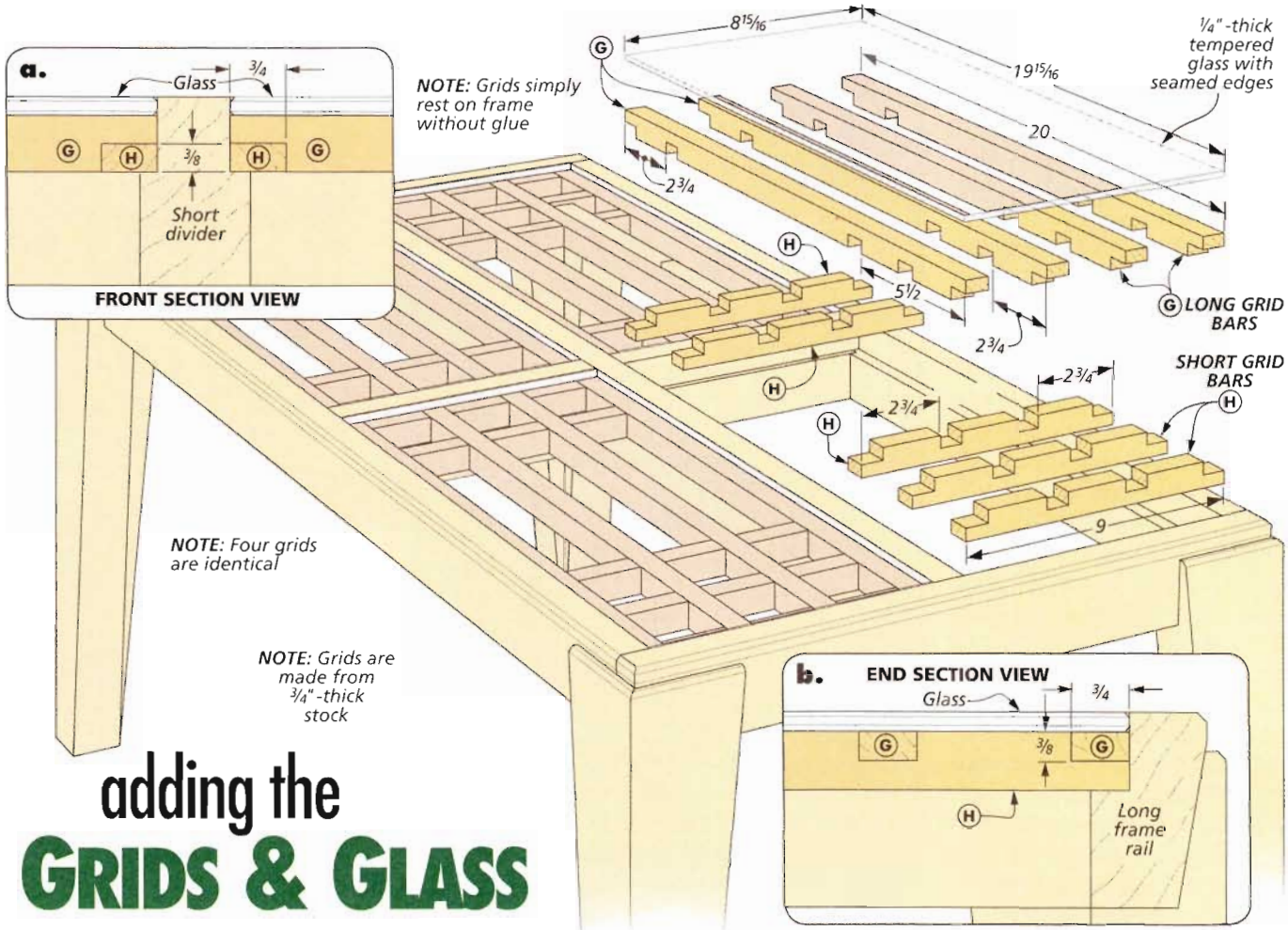

adding the GRIDS & GLASS

With the legs installed, you're heading into the final stage of the project — making the decorative grids. This may seem like a lot of work, but it actually goes pretty quickly. As I'll explain, there's a shortcut you can take to cut the half-lap joints used to assemble the grids. Another big plus is that all four grids are identical in size.

GANG UP. Each grid is made up of four long bars and five short crossbars. Three short bars are spaced near the outside end of the grid to create two rows of square openings. The other two bars are positioned at the inside end to create a single row of openings.

Rather than cut all the joints individually, an easier approach is to "gang up" this joinery. I cut the half-lap notches into wide blanks, then ripped the bars to width from the blanks. The How-To box below shows the basic sequence, so I'll just add a couple of helpful pointers.

BLANKS. To get started, you'll need to cut the blanks to finished length and rough width. I cut one long blank (4" wide) and one short

How-To: Make Multiple Half Laps

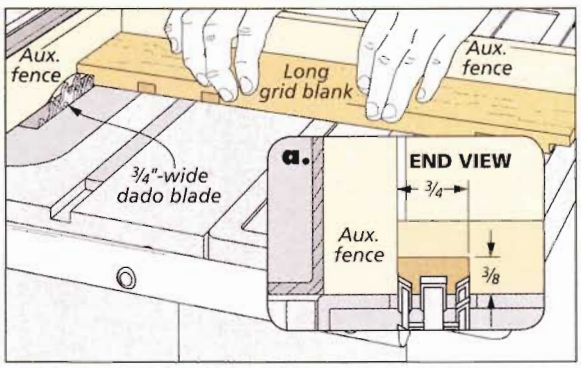

Initial Cuts. *After fine-tuning the blade height with test cuts, start by cutting a notch or rabbet on both ends of the long and short blanks.*

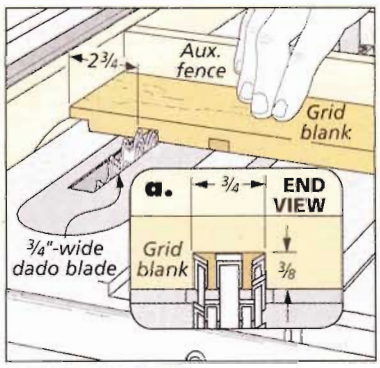

Next Cuts. *Readjust the rip fence setting to make the second and then the third set of cuts.*

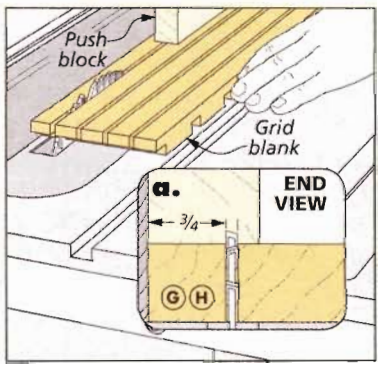

Rip the Blanks. *Rip the blanks into individual strips, leaving a little extra thickness for cleanup sanding.*

blank (5" wide) for each grid panel. You can size the length of the blanks to the openings in the top frame, allowing about 1/32" overall clearance. And you'll want to cut a couple of extra test pieces to help fine-tune the table saw setup.

NOTCH CUTS. After using the test pieces to adjust the dado blade height, the cuts are made using the rip fence to position the notches. You can use the same rip fence setting to make the corresponding cuts in both ends of the long and short blanks. But you'll cut on the bottom side of the long blanks and the top side of the short blanks. The long blanks will have a third set of cuts only at one end.

RIP CUTS. In order to end up with tight joints, the grid bars need to be the right width. So I cut them just a tad snug to allow for cleanup sanding of the saw marks.

ASSEMBLY. All that remains is the assembly. The key here is to make sure the grids end up square and are a good fit to the frame. I accomplished this by gluing up the grids a few pieces at a time.

Once all four grids are assembled and sanded, you can drop them in place for a preliminary look. Then before starting on the finish, I put in an order with the glass supplier. (Allow 1/16" clearance in both dimensions.) You don't want a long wait before putting your new coffee table to work and your craftsmanship on display. W

DESIGNER'S NOTEBOOK

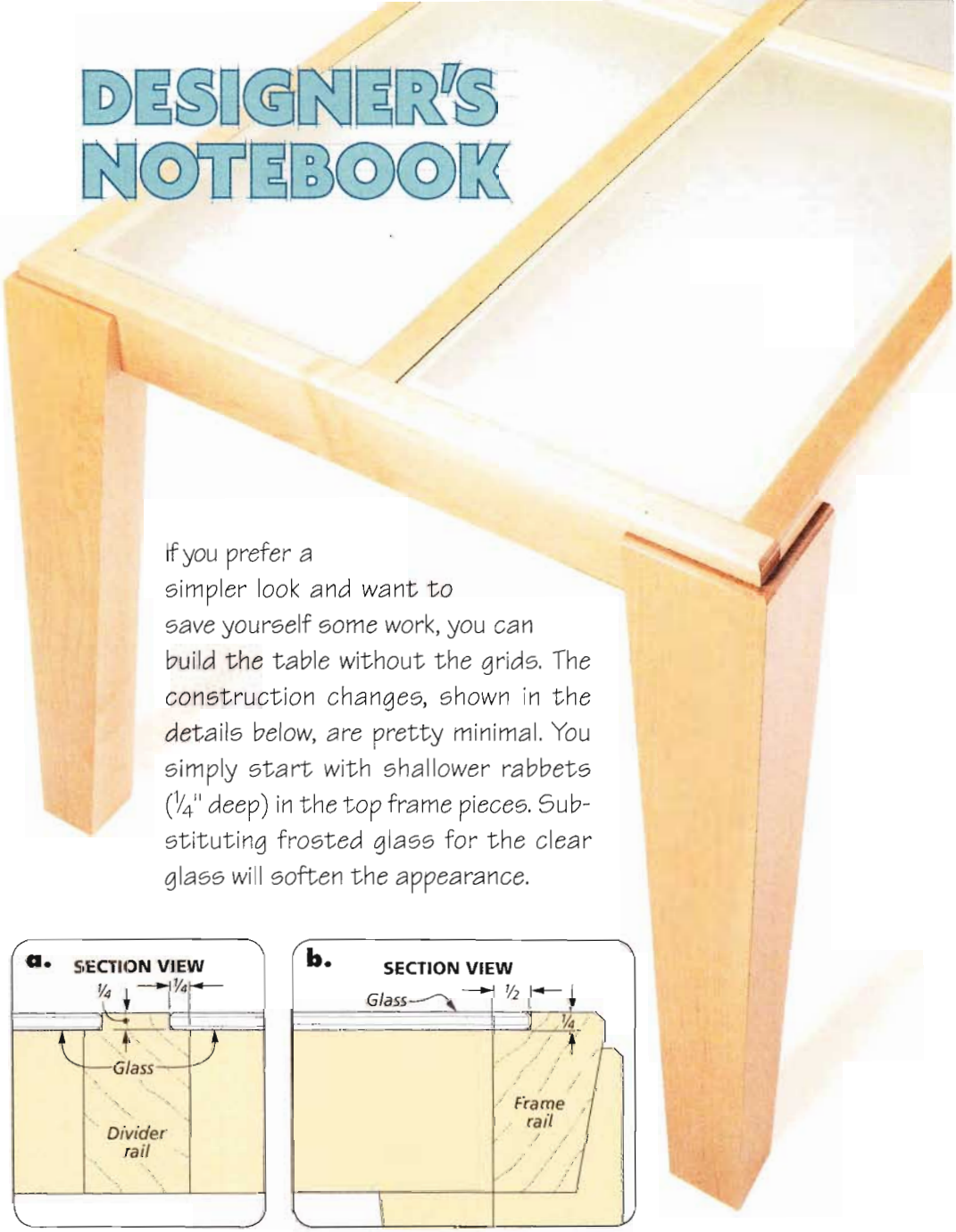

If you prefer a simpler look and want to save yourself some work, you can build the table without the grids. The construction changes, shown in the details below, are pretty minimal. You simply start with shallower rabbets (1/4" deep) in the top frame pieces. Substituting frosted glass for the clear glass will soften the appearance.

Materials, Supplies & Cutting Diagram

A	Long Frame Rails (2)	1 1/2 x 2 1/2 - 41
B	Short Frame Rails (2)	1 1/2 x 2 1/2 - 21
C	Long Divider (1)	1 1/2 x 2 1/2 - 41
D	Short Dividers (2)	1 1/2 x 2 1/2 - 9
E	Leg Sections (8)	1 3/4 x 3 1/2 - 17 1/2
F	Leg Splines (4)	1/8 hdbd. - 3/4 x 15 1/2
G	Long Grid Bars (16)	3/4 x 3/4 - 20
H	Short Grid Bars (20)	3/4 x 3/4 - 9
•	(4) 1/4" Tempered Glass Panels	(8 15/16" x 19 15/16")
•	(8) #8 x 2 1/2" Fh Woodscrews	

1 3/4" x 8 1/2" - 72" Hard Maple (8.5 Bd. Ft.)

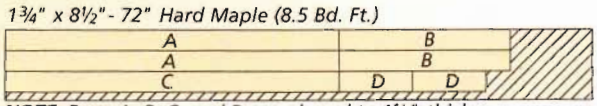

***NOTE:** Parts A, B, C, and D are planed to 1 1/2" thick*

1 3/4" x 8 1/2" - 72" Hard Maple (8.5 Bd. Ft.)

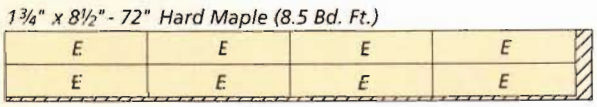

3/4" x 7 1/2" - 84" Cherry (4.4 Bd. Ft.)

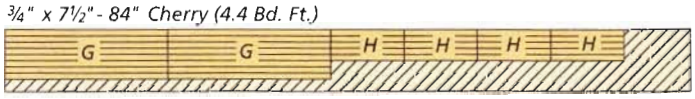

***ALSO NEEDED:** 1/8" - 24" x 24" hardboard*

SHOP NOTEBOOK

Hinge Mortises

HINGE TEMPLATE

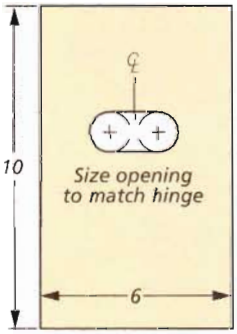

The drop-front lid on the desk on page 32 pivots on three, brass card table hinges. These hinges are recessed into both the lid and the upper case of the desk.

Creating the hinge mortise is a two-step process. First, a shallow mortise is routed for the leaves of the hinge. Then, a deeper mortise is created for the hinge knuckle. All it takes to do this is a router and a shop-made template.

TEMPLATE. The template is simply a piece of ½" plywood with an opening sized to match the hinge. You can use one of the hinges to trace the outline onto the blank. After drilling a hole at each end and removing the remaining waste with a jig saw, sand the edges smooth with a sanding drum.

To use the template, clamp the lid and upper case together, leaving a 1/16" gap between the edges. (I cut a couple of thin strips to use as spacers at each end.) Then attach the template to the desk with some double-sided tape. As you can see in Figure 1, a dado clean-out bit with a top-mounted bearing makes quick work of routing the shallow recess for the hinge leaves.

To create the deeper mortise for the hinge knuckle, first mark the edges of the mortise. (This mortise is ¾" long and centered on the first mortise.) Then, adjust the bit for a deeper cut and rough out the bulk of the waste, stopping just shy of the layout lines, as shown in Figure 2. Finally, you can square up the edges of the mortise with a chisel.

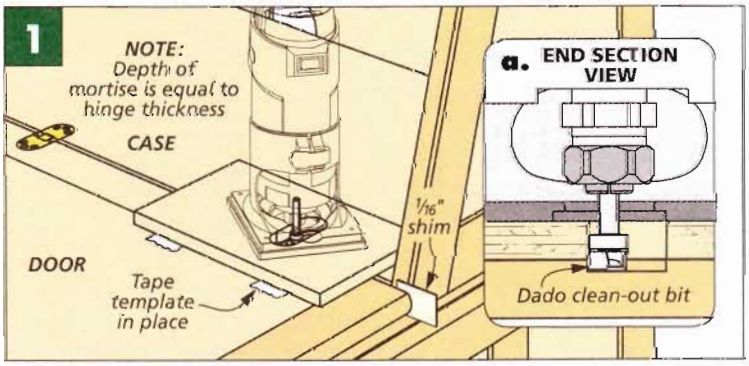

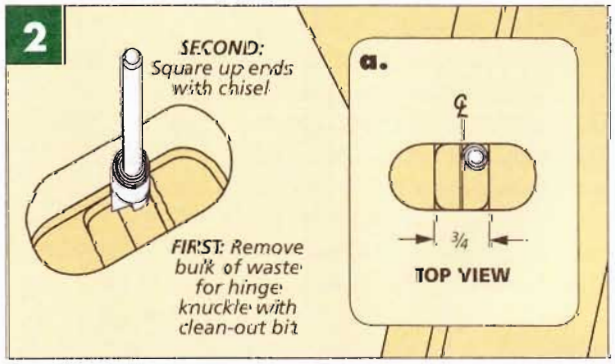

Easel Slot

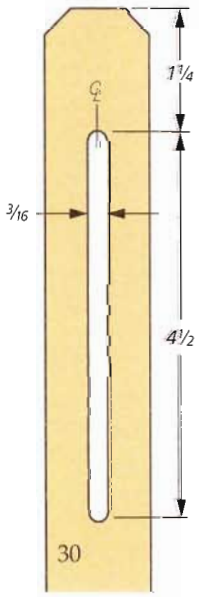

To accommodate different sizes of frames, the easel on page 18 has an adjustable clamp. The clamp slides in a slot in the support arm. Using a 3/16"-dia. straight bit, I routed this slot in two passes, raising the height of the bit in between.

I began by drawing stop and start lines on the fence of my router table (Figure 1). With the bit raised half way, I lowered the workpiece onto the bit at the start line and routed to the stop line. To complete the slot, simply raise the bit and repeat the process Figure 2.

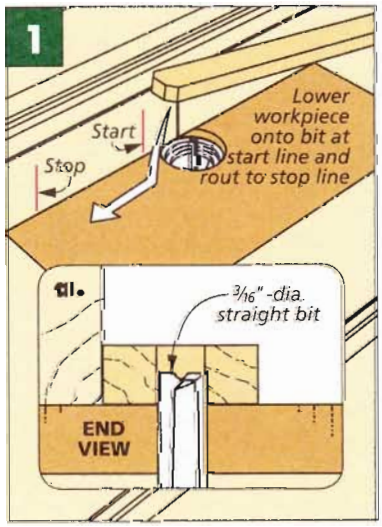

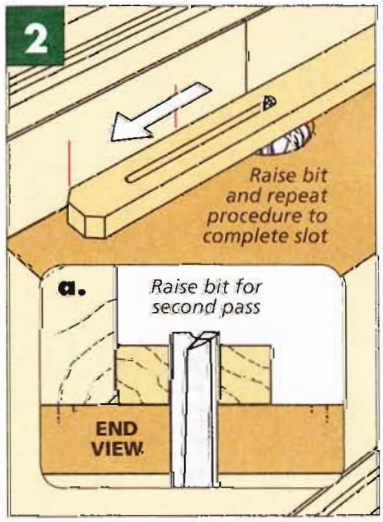

Leg Taper Jig

Tapering the legs for the coffee table on page 22 presents a challenge. Because each leg is glued up as a mitered assembly, you can't use the same jig setup to taper both edges. Instead of making two separate jigs, I made one with a movable fence, as shown in the photo.

As you can see in the drawing at right, the jig is just a plywood base with a narrow fence. A small block of plywood is glued to one edge of the fence, flush with the end, to serve as a stop. This L-shaped fence will cradle the leg blank as the tapers are cut.

ATTACHING THE FENCE. The fence is secured to the base with a pair of dowel pins. The pins fit into two different sets of holes in the base of the jig, depending on which side of the leg you're tapering. The trick is to locate the dowels and drill the holes in the base so everything lines up.

To do this, I started by laying out the tapers on one of the leg blanks and then placing the blank on the base of the jig so one taper lined up perfectly with the edge of the base. Then, I butted the fence up to the leg and clamped it in place. Next drill a pair of holes through the fence and partially into the base, as shown in Figure 1.

After removing the clamps, turn the leg blank around so that the second taper lines up with the edge of the jig. Then clamp the fence in place again and, using the holes in the fence as a guide, drill a second set of holes in the jig (Figure 2). Now just glue a couple of dowel pins in the holes in the fence and you're ready to go.

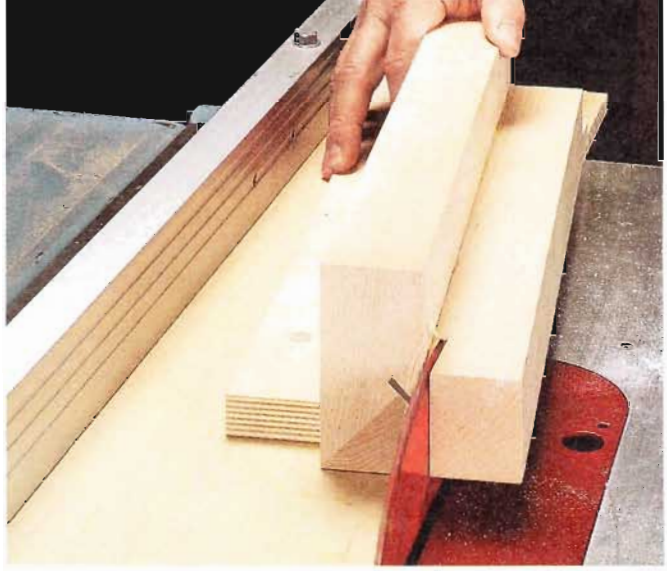

This jig allows you to cut both tapers on each table leg without moving your rip fence.

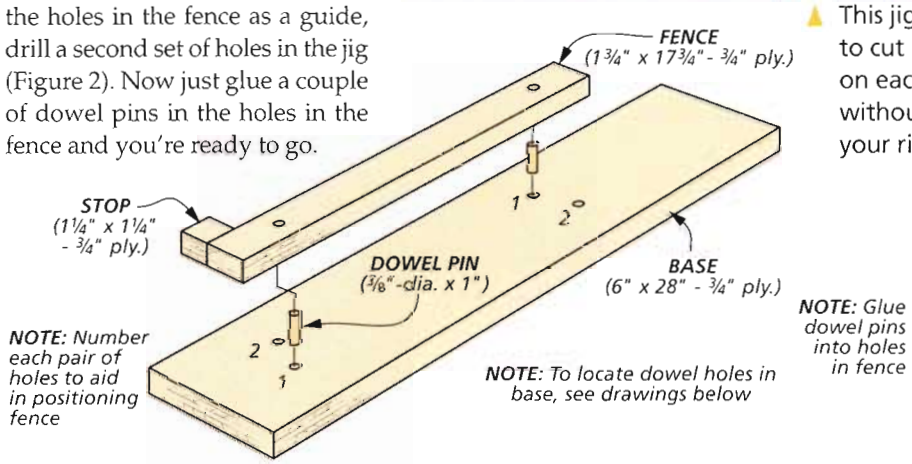

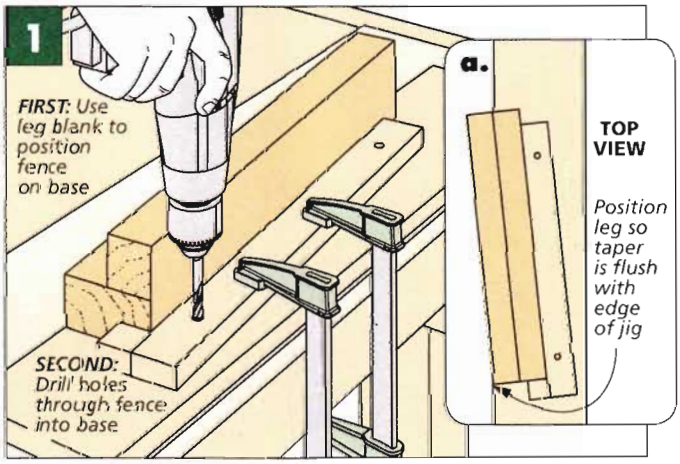

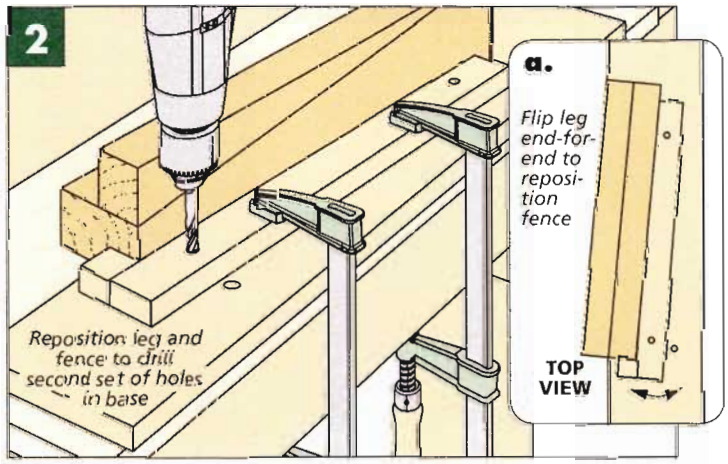

Protruding Hinge Screws

The lower doors on the drop-front desk are mounted with no-mortise hinges. Although these hinges are easy to install, I came across one catch — the heads of the screws stand proud of the hinge just enough to prevent the doors from closing properly.

In order to solve this problem, I simply enlarged each screwhole with a countersink bit. Then I used a permanent marker to camouflage the bright steel rim of the hole.

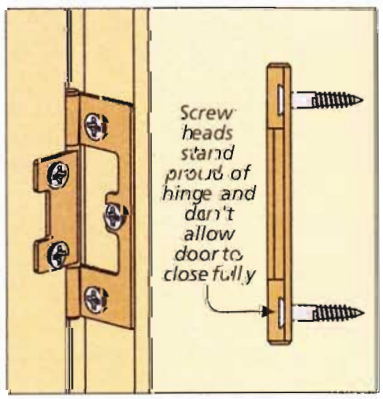

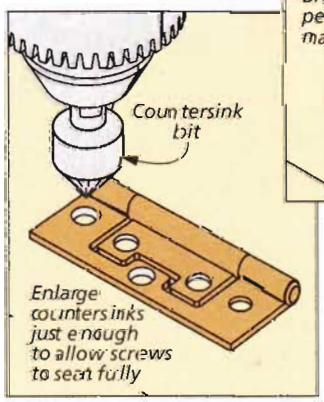

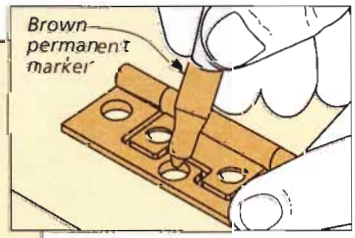

Cover Up. *After enlarging the countersinks, use a brown permanent marker to cover the bright steel around the holes.*

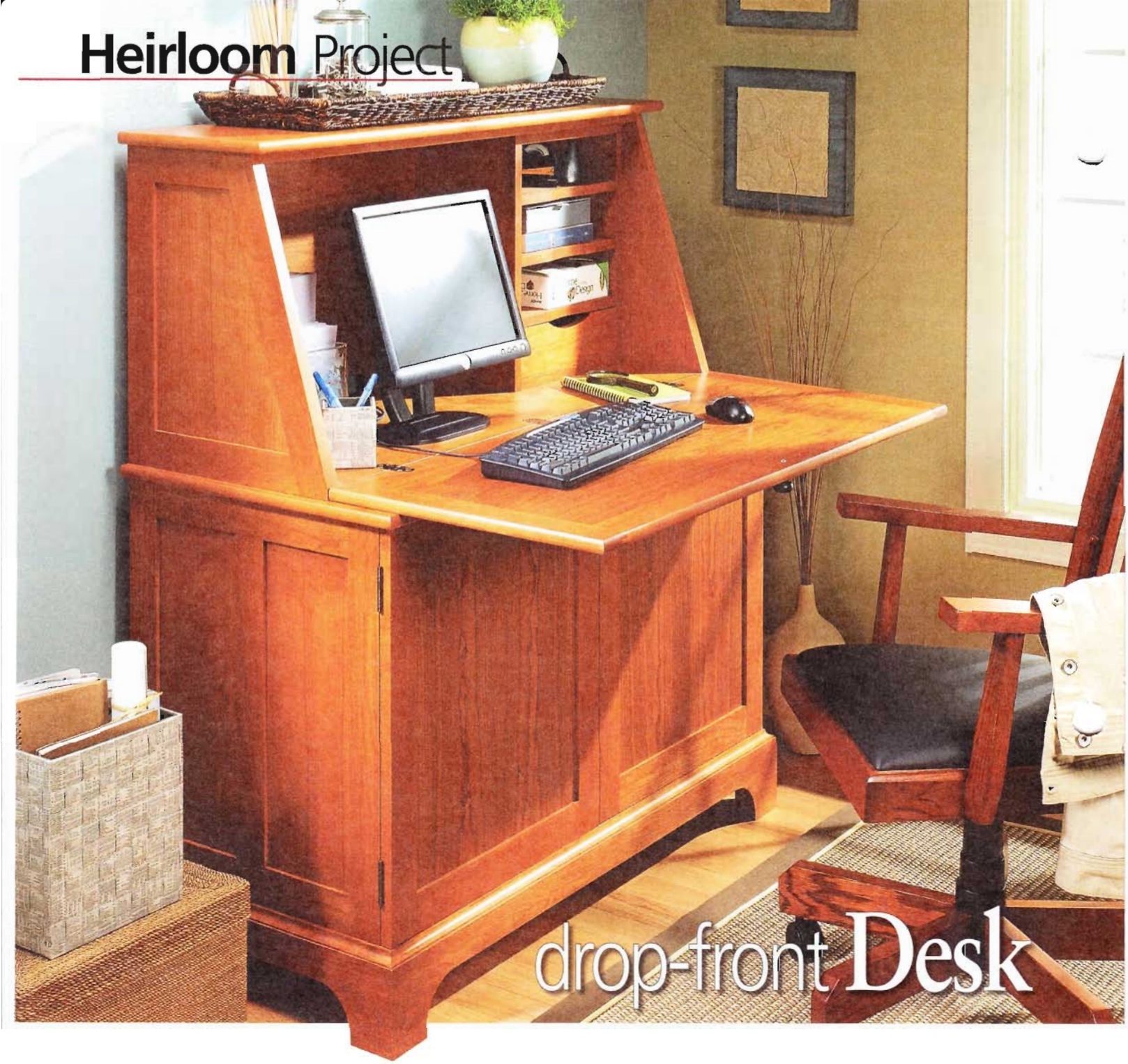

drop-front Desk

Keep your home office or spare room organized with an attractive piece of furniture that's as practical as it is stylish.

I admit it — my computer desk and office are always a source of frustration when it comes to keeping things presentable. The tangle of cords and stacks of paper always look disorganized and messy. So when I set out to build a functional and attractive desk, I had some definite ideas about what it needed.

First, it had to keep the computer case, printer, and other peripherals out of sight but still allow them to stay cool. Second, I wanted it to have plenty of room to store the working papers and documents that are inevitably lying around. Third, and most important, I didn't want it to look like a computer desk.

This traditional design satisfies all my requirements. It looks great and keeps everything organized. Best of all, it's a straightforward project to build. I relied on hardwood veneer plywood (I chose cherry) and hardwood edging and facing. Now my office is both neater and more efficient.

CONSTRUCTION DETAILS

OVERALL DIMENSIONS:
49⅜"H x 42½"W x 21"D

Plywood top is attached to upper cabinet with screws

Hardwood facing gives the appearance of frame and panel construction

Slanted front of upper cabinet gives the desk a stylish profile

Handy organizer helps keep things in their place

Flush panel on inside of drop-front provides flat surface for keyboard and mouse

Card table hinges secure door. See page 51 for hardware sources

Find tips for making and applying edging on page 42

Large center bay houses computer case

No-mortise hinges simplify door attachment

Bullnose edging is made in three easy steps at the router table

Adjustable shelf handles extra storage needs

Pull-out printer shelf rides on drawer slides

Stub tenon and groove joinery creates sturdy doors

Profile on base frame is created with a combination of routed profile and table saw cuts

Solid base supports the hutch

Frame and panel construction used on all doors

Glue blocks add strength to the base frame

A pull-out shelf for a printer is just one of the handy features of the drop-front desk.

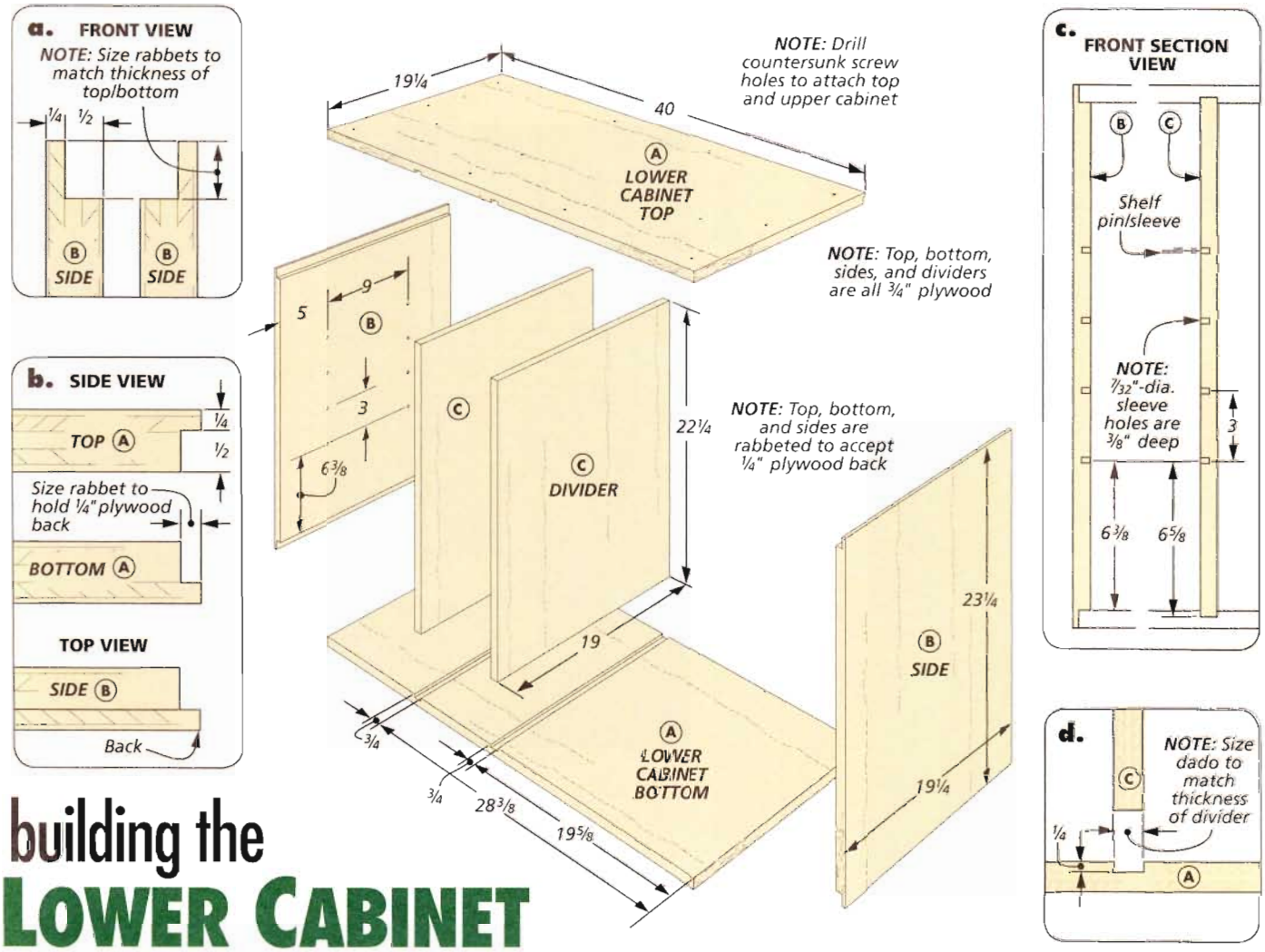

building the LOWER CABINET

The lower cabinet provides a solid foundation for the desk. It features a compartment for a PC, a slide-out shelf for a printer, and an adjustable shelf for additional storage. The plywood case relies on rabbet and dado joinery for strength.

TOP & BOTTOM. I started with the top and bottom since most of the layout work and joinery cuts are on these pieces. After cutting both pieces to size, I installed a dado blade to match the thickness of the plywood and cut the ¼"-deep dadoes for the two vertical dividers (detail 'd'). I also drilled countersunk holes in the top to attach the upper cabinet.

SIDES. Now it's time to work on the sides. After cutting the pieces to size, cut a rabbet at each end on the inside face to hold the top and bottom. Next, I drilled the holes for the adjustable shelf on the inside face of the left side, as shown in detail 'c.' With an auxiliary rip fence on the table saw, you can cut the rabbets on the back edge of the top, bottom, and sides for the back (detail 'b' and box below).

VERTICAL DIVIDERS. Two vertical dividers form the compartments inside the cabinet. Since they'll fit into the dadoes you cut on the top and bottom earlier, there's no need for any further joinery work on these pieces. All you need to do is drill the holes for the shelf pin sleeves in the left divider to mirror those on the left side (detail 'c').

ASSEMBLY. At this point, you're ready to assemble the case. I started by gluing the dividers in the dadoes in the top and bottom. Then I added the sides. You might want to use clamping squares to keep the large case stable and square during the glue up.

How-To: Cut Rabbets

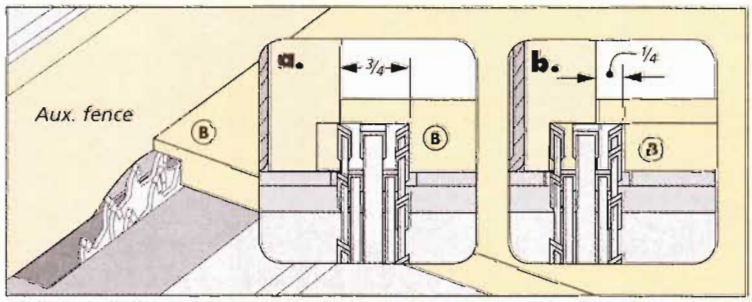

Rabbets on the Top, Bottom & Sides. *With an auxiliary rip fence in place and a dado blade installed, bury part of the blade in the fence. Adjust the fence to reveal the right amount of blade for each cut.*

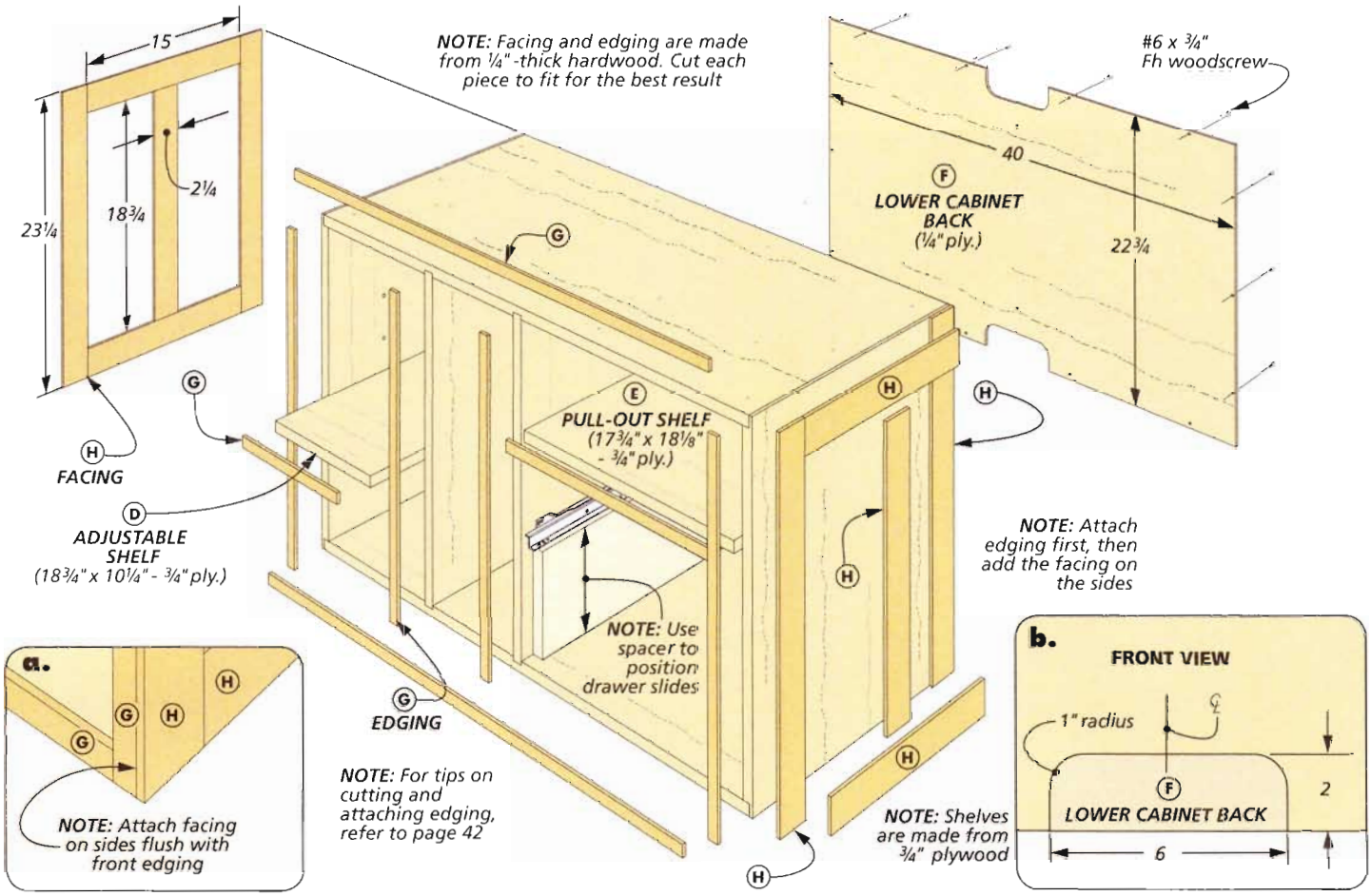

SHELVES. Next, cut the two shelves to final size. Note the size of the pull-out shelf is 1" narrower than the opening. This allows room for the metal drawer slides.

ADD THE EDGING & FACING. To cover the exposed edges of the plywood I cut thin strips of hardwood edging. You can find out more about how to do this on page 42. I also added decorative facing on the sides to create the look of framed panels. These facing pieces are simply 2¼"-wide strips of hardwood. To make the edging, you can resaw hardwood stock on the table saw.

To add the facing, start with the full-length "stiles" on the sides. I used long cauls and clamps to attach the facing. After gluing the side pieces in position, you can get an accurate measurement for the horizontal "rails" and in turn the middle vertical piece.

DRAWER SLIDES. All that remains now is to attach the drawer slides for the pull-out shelf. As you can see in the drawing above, I used a spacer for accurate placement.

BACK. The plywood back fits into the rabbeted opening and adds stability to the cabinet. After cutting it to size, you'll need to make a small cutout on the upper and lower edges for power cords and cable access. The box below shows an easy way to do this. After you've finished sanding the cutouts, you can attach the back with screws.

Make the Cable Cutouts

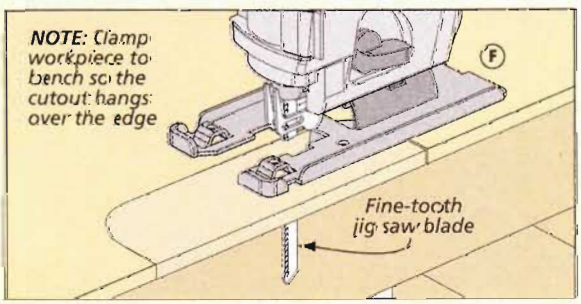

Start with a Jig Saw. *After laying out the shape of the cutouts, use a jig saw to cut the curved shape. A fine-tooth blade makes a clean cut in the plywood.*

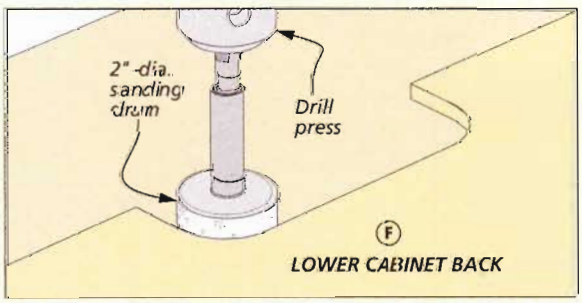

Finish with a Sanding Drum. *A sanding drum on the drill press (matching the radius of the curve) makes cleaning up the plywood edge of the cutout a snap.*

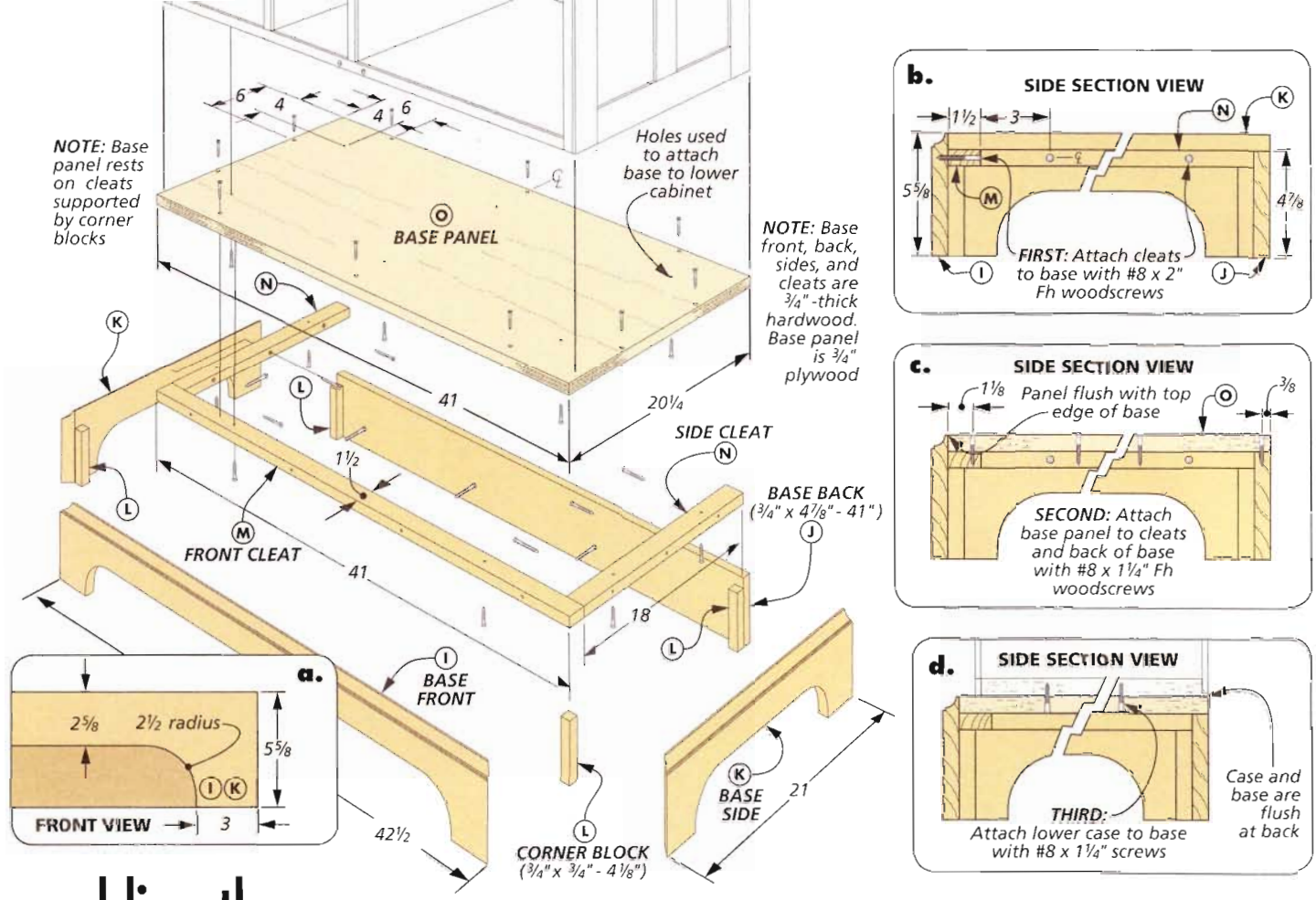

adding the BASE & DOORS

The lower cabinet sits on a base that also adds some decorative details to the desk. It's simply a hardwood frame with a plywood panel. The mitered front corners and the rear butt joints are reinforced with corner blocks. The base panel rests on cleats and the edge of the base back.

BASE FRONT, BACK & SIDES. I started by cutting the base front, back, and sides to final width and rough length. You'll need to move to the router table to add the decorative profile on the frame pieces. This profile is created by routing a cove on the top edge of the front and sides and then cutting a shoulder on the table saw. The box below shows how it's done.

Next, tilt the table saw blade to 45°. Use a miter gauge to guide the workpiece as you miter both ends of the front and the front end of each side to final length.

CUT THE CURVES. Now lay out the curves on the front and sides and cut out the shape at the band saw or with a jig saw, as shown in the illustration below. I cleaned up the saw marks with a sanding drum for a smooth, even edge.

ASSEMBLY. With all the frame pieces complete, you're ready to assemble the base. I began by gluing up the miters. An easy way to glue up the joints is to lay

How-To: Make the Details on the Base

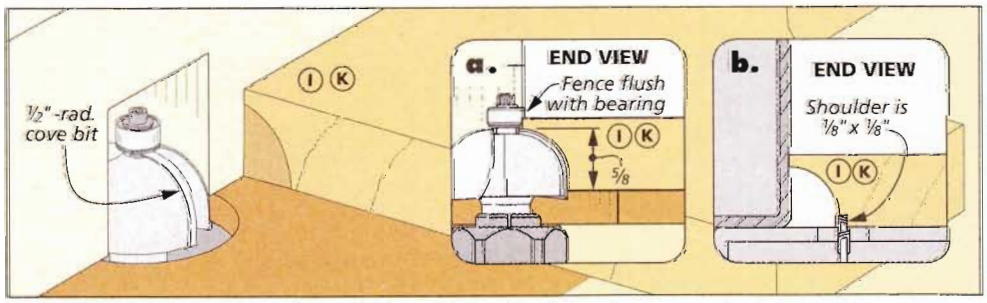

Edge Profile. *With a ½"-rad. cove bit installed, set the fence flush with the bearing. Rout the cove in multiple passes. Start with the bit below final height, then raise it to make a cleanup pass. Finish the profile by cutting the shoulder at the table saw with the blade raised to ⅛".*

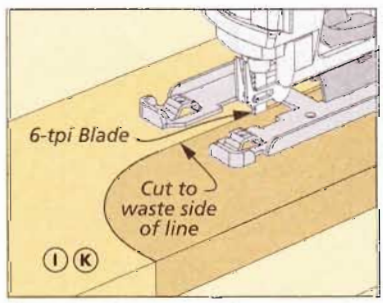

Cut the Curves. *A jig saw with a 6-tpi blade works well to cut the curves in the hardwood base.*

the pieces flat on your bench and tape the outside faces of the joints together. Then all you have to do is apply glue to each surface and close the joints. The tape seals the miters and prevents glue squeezeout on the face. After that, glue up the butt joints on the back and clamp them in position.

CORNER BLOCKS & CLEATS. Next, add the corner blocks and cleats. The thing to keep in mind here is to position the cleats so the top panel will sit flush with the top of the base.

Attach the blocks in the corners with glue and clamps. When the glue has dried, cut the cleats to final size and drill countersunk screw holes to hold the base panel. Install the cleats, as shown in detail 'b' on the opposite page.

BASE PANEL. Complete the base by cutting the base panel to size. But before attaching the cleats you'll need to drill countersunk holes in the panel to attach the base to the lower cabinet. See details 'b,' 'c,' and 'd' on the opposite page.

DOORS. At this point, you can turn your attention to the doors. They're pretty straightforward frame and panel assemblies built with stub tenon and groove joinery.

You can start by cutting the rails and stiles to size. Then cut a centered groove on the edge of each piece to match the thickness of the plywood door panels. Now, set the rip fence as a stop and use the miter gauge to hold the workpiece as you form the stub tenons by nibbling away the ends of the rails.

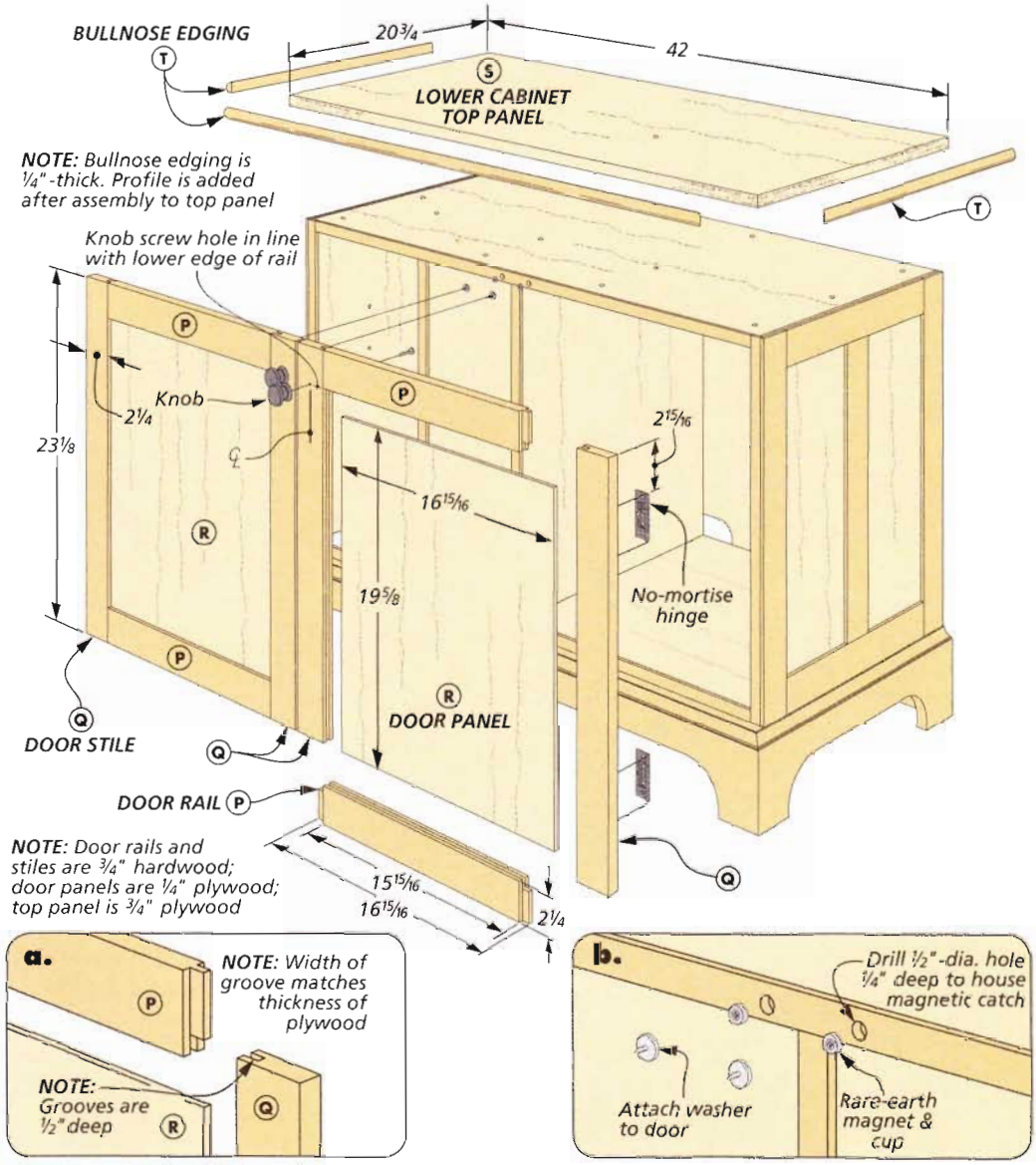

After cutting the panels to size, you can assemble the doors. When the glue dries, drill stopped holes for the magnetic catches in the cabinet as shown in detail 'b,' then screw the washers to the doors. Attach the doors using no-mortise hinges. All you need to do is mark the location and install the screws.

BULLNOSE TOP. To complete the cabinet, cut the plywood top to size and glue on the edging. The box below shows how to create the bullnose profile on the front and side edges.

Making Bullnose Edging

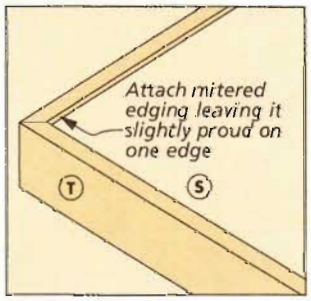

Edging. *Carefully miter the edging and glue it in place flush with one face.*

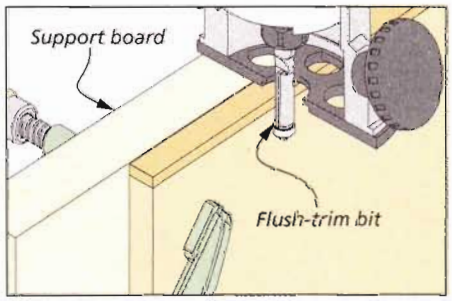

Trim the Edging Flush. *Clamp a support board to the workpiece for the router to ride on and trim the edging flush.*

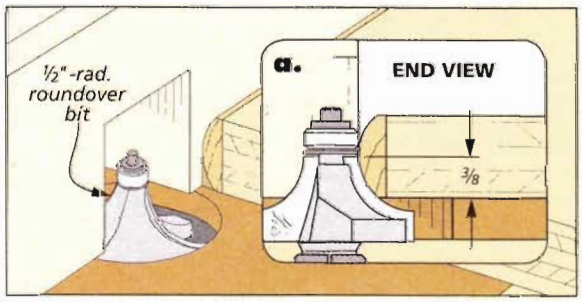

Rout the Profile. *With a ½"-rad. roundover bit installed, set the fence flush with the bearing to guide the workpiece as you rout both sides of the edging.*

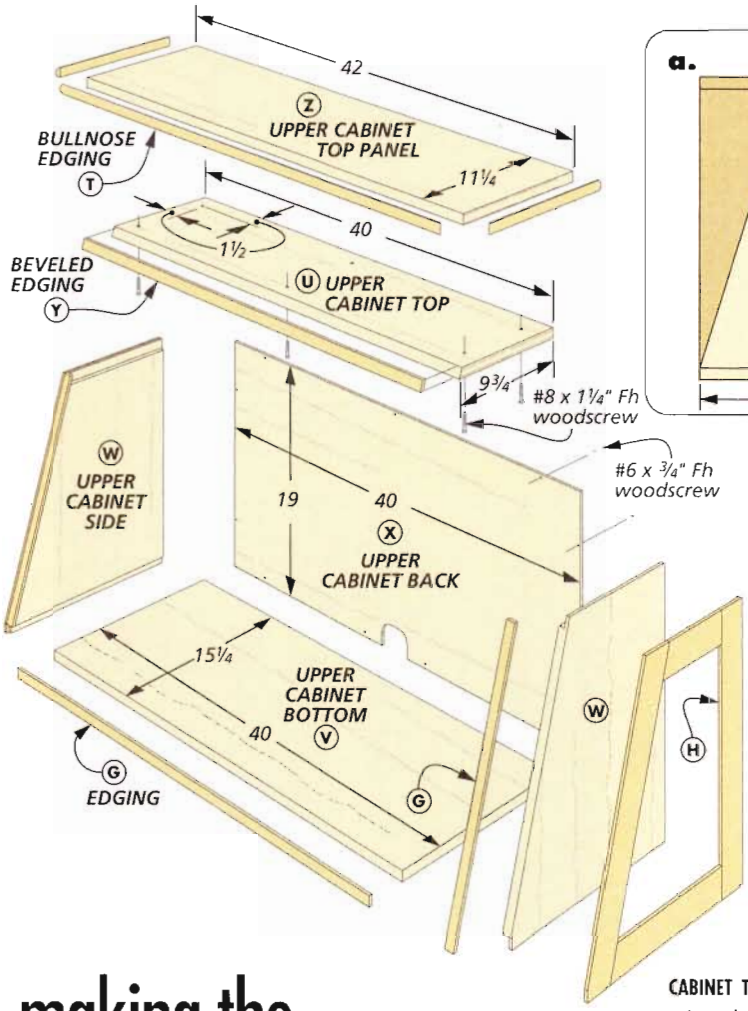

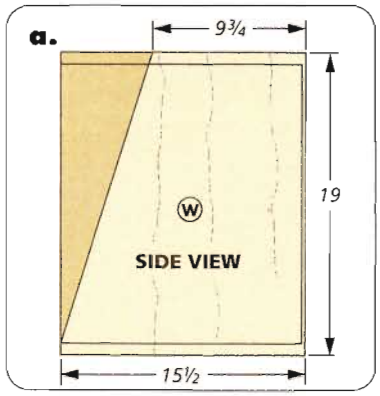

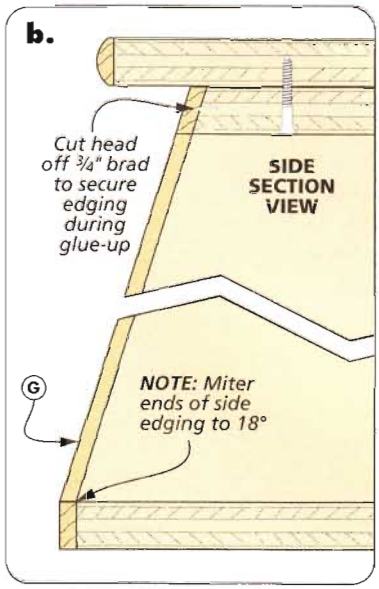

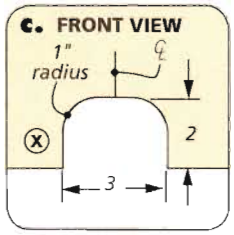

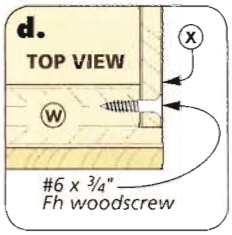

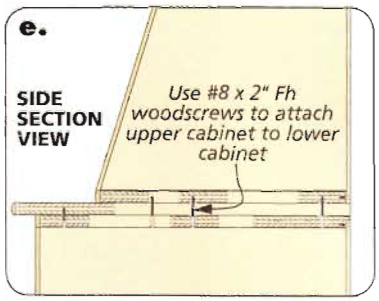

making the UPPER CABINET

The upper cabinet with its slanted-front is perfect for housing a flat-screen monitor as well as the keyboard and mouse. The drop-down door opens to provide a worksurface. This cabinet is attached to the lower cabinet with screws.

CABINET TOP & BOTTOM. I started by cutting the top to length and rough width. Then I tilted the table saw blade 18° and ripped the front edge to final width. (This angle defines the slope of the cabinet.) You'll also need to drill countersunk holes for the screws that attach the top. Next, cut the bottom to final size and set it aside for now.

SIDES. After cutting the sides to overall size, I attached an auxiliary fence and installed a dado blade in the table saw. Burying the blade in the auxiliary fence makes it easy to cut the rabbets in the top, bottom, and back edges of the sides. The sides are also tapered to 18°.

I used a taper jig on the table saw to cut the angled front edge (box below). When cutting the tapers, just keep in mind that the left and right sides are mirror images.

BACK. Now you can cut the ¼" plywood back to size and make the cutout for cord access to (detail 'c'). Then drill countersunk screwholes, as shown in detail 'd.'

How-To: Make the Angled Cuts

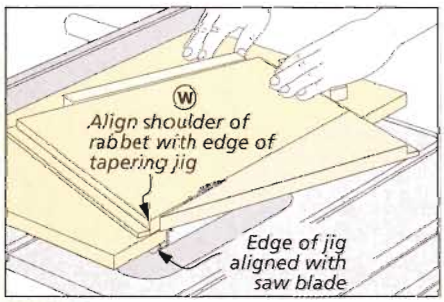

Taper the Sides. *Position cleats on a tapering jig to define the angle of the taper so you can cut the sides to final shape.*

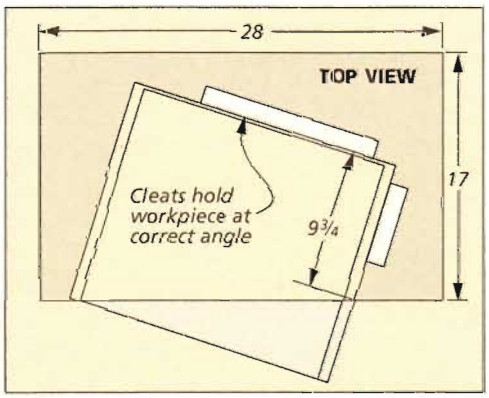

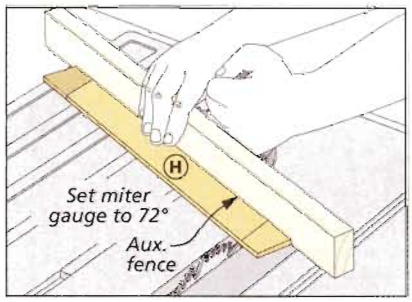

Cut the Facing. *Use an auxiliary fence on the miter gauge to cut and fit each piece of facing individually.*

ASSEMBLY. At this point, you're ready to assemble the case. After the glue has dried, it's time to add the edging. And for the sloped front of this cabinet, you'll need to do a few things different than you did on the lower cabinet.

For a start, the upper strip of edging on the case top needs to be beveled on both edges to conform to the sloping sides. You'll find an easy way to cut the beveled edging on page 42. After installing the top piece, I cut the strips of side edging with an 18° miter on each end (detail 'b'). This way, the edging fits the beveled top strip and the square lower edging perfectly.

FACING. You can now add the facing to the sides. Once again, it's all about getting the angles right. The right illustration at the bottom of the opposite page shows how I cut it at the table saw. I cut and fit each piece sequentially, starting with the vertical pieces.

TOP. The addition of the top completes the cabinet. Cut the plywood to final size and attach the edging. Then, head to the router table and rout the bullnose profile as you did for the lower cabinet. After fastening the top panel to the cabinet, you can attach the back.

DOOR. Like the doors on the lower cabinet, the upper cabinet door also uses frame and panel construction, relying on stub tenon and groove joinery. But this door requires a second panel on the inside to create a worksurface that's flush with the door frame. And since the actual thickness of ¼" plywood varies, you'll need to measure the combined thickness of the two pieces to calculate the position of the groove in the frame pieces.

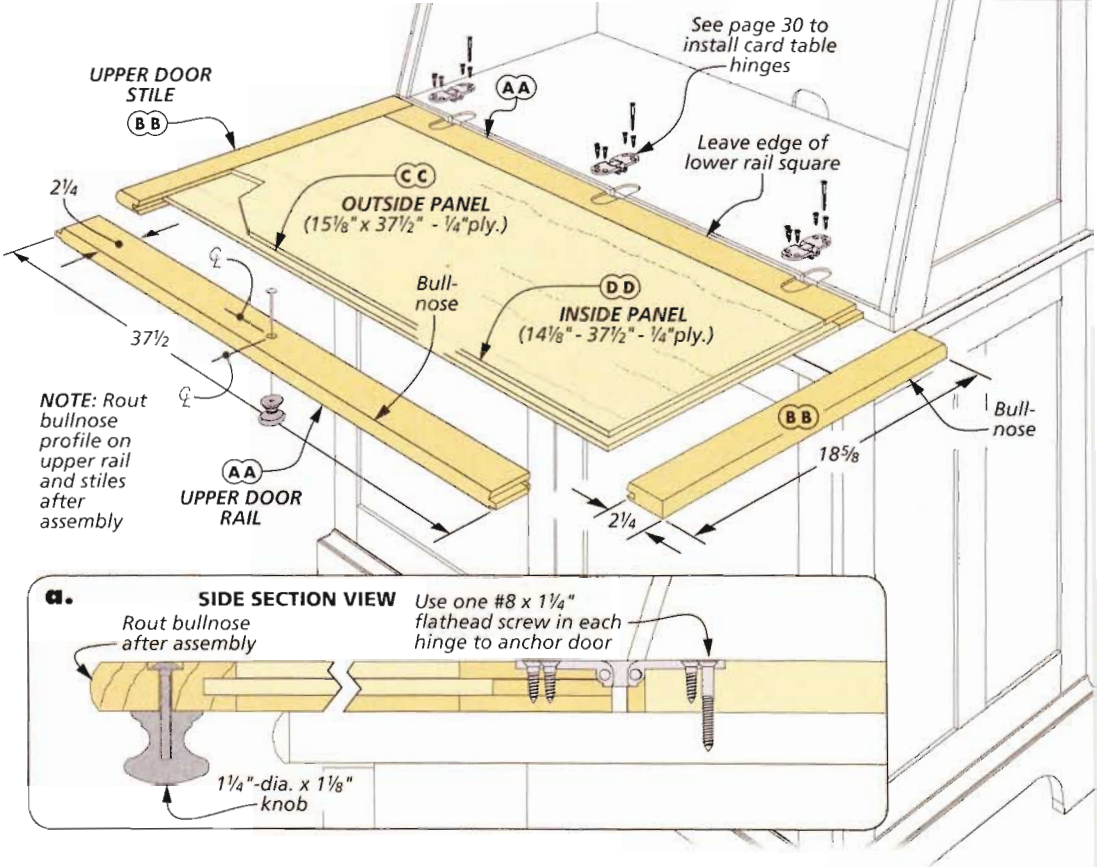

You can start by cutting the rails and stiles to final size. Next, cut the slightly offset groove for the plywood panel in the rails and stiles based on the plywood thickness. The box below has a few tips to help you here. After that, you can cut the tenons on the rails with the dado blade using a miter gauge.

DOOR ASSEMBLY. With the plywood panel cut to size, assemble the door with glue and clamps. You'll then need to rout the bullnose profile on the stiles and upper rail using the same techniques as before. After the glue dries, cut and install the inside plywood panel with glue.

HINGES & KNOB. The door attaches with inset "card table" hinges. I antiqued the brass hinges using a commercially available solution (refer to Sources on page 51 for details). Then, I made a template to rout the mortises (see Shop Notebook on page 30). As you can see in detail 'a,' above, I installed the hinges with screws and added one longer screw to help strengthen to the hinged joint. Finally, drill a hole for the door knob and secure it in place with a machine screw.

▲ Shop Notebook on page 30 shows how to rout the hinge mortises using a simple template.

Making the Frame & Panel Door

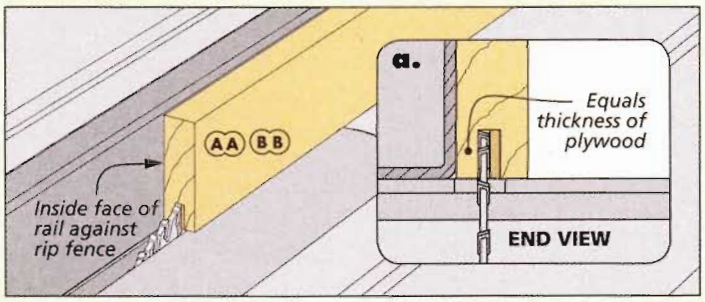

Cut the Offset Groove. *Set the rip fence to match the thickness of the plywood panel and make the first cut. Then, move the fence and widen the groove to accommodate the outside panel.*

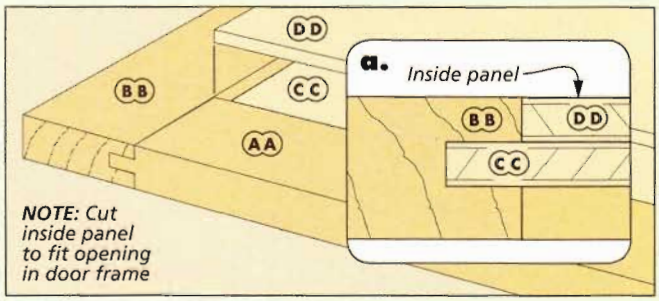

Double Panels. *The inside door panel provides a flat surface when the door is open. All you need to do is glue it to the outside panel after assembling the door.*

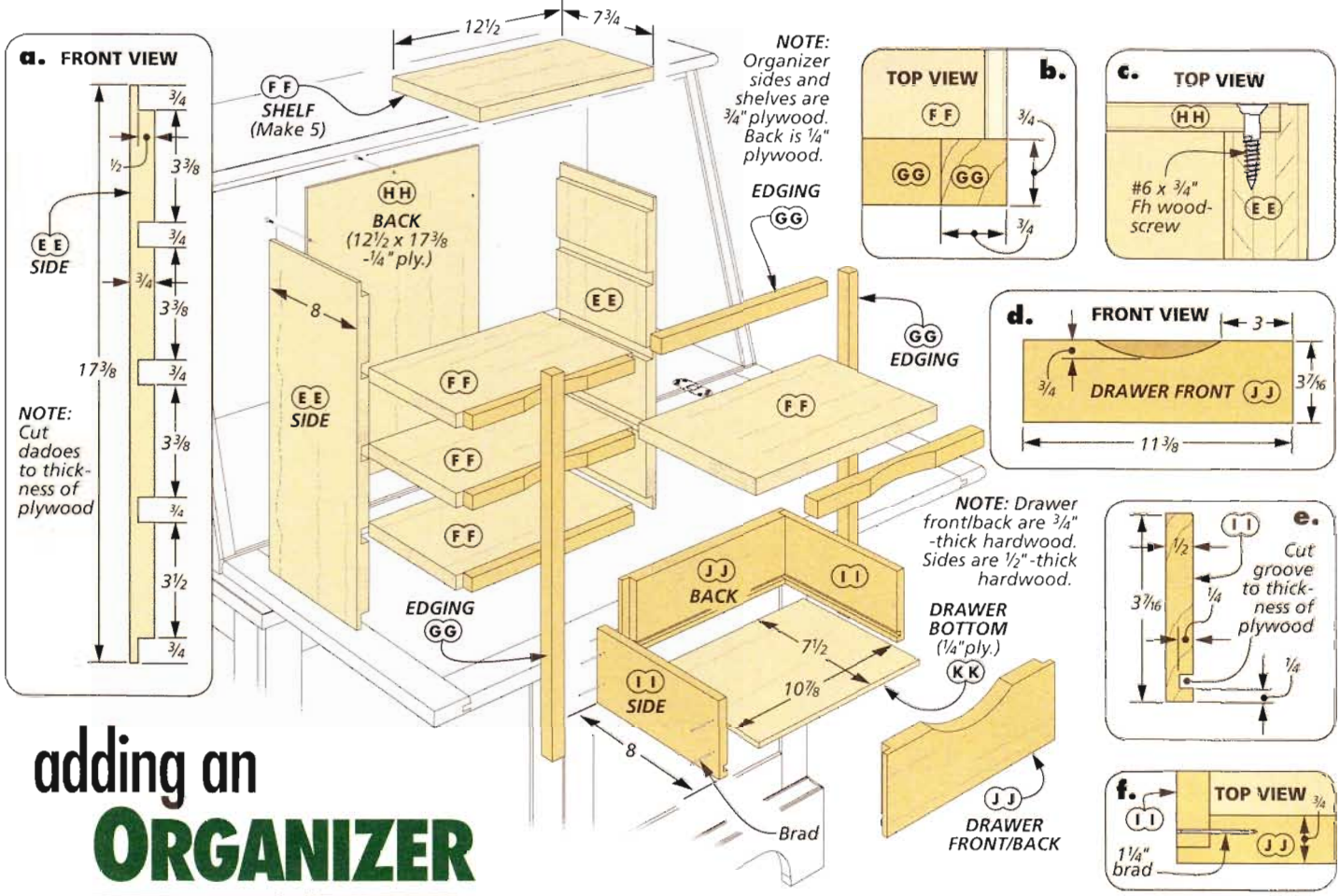

adding an ORGANIZER

In addition to holding your computer's monitor, keyboard, and mouse, the upper cabinet houses a handy desk organizer. The organizer features shelves for papers and DVDs and a drawer for other supplies. And since the organizer isn't attached to the cabinet, you can place it wherever you need it.

SIDES. I got to work on the organizer by cutting the sides to size. Then, with a dado blade set to match the thickness of the plywood, I cut the dadoes in both sides and the rabbets on the top and bottom edges. Detail 'a,' above shows the spacing of the dadoes and rabbets. To complete the sides, you can use the auxiliary rip fence to rabbet the back edge.

SHELVES. After cutting the five plywood shelves to size (two of which serve as the top and bottom of the organizer), assemble the case by fitting the shelves into the dadoes and rabbets in the case. Glue and clamps are all you need to finish the assembly.

EDGING. As you can see in the drawing above, the exposed plywood front edges of the organizer are covered with ¾" hardwood edging. The edging for the middle three shelves has a decorative shallow recess. You can cut the recess at the band saw and sand it using a sanding drum, as shown in the box below. Once you've completed the recesses, simply install the edging with glue and clamps. After that, you can cut the ¼" plywood back to size and attach it with screws.

How-To: Cut the Shelf-Edge Profile

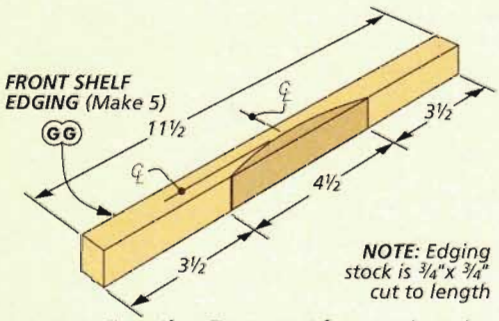

Lay Out the Recess. *After cutting the edging to length and dry fitting it in the assembly, mark the layout of the curve.*

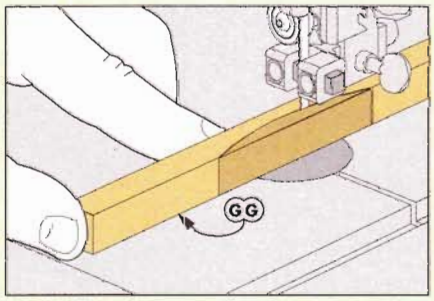

Band Saw Cuts. *A ¼" blade on the band saw makes the curved cut a breeze and leaves a fairly smooth surface.*

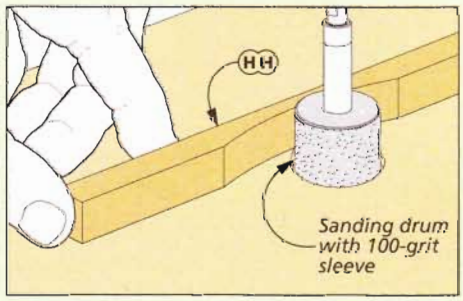

Quick Sanding. *With a sanding drum chucked in the drill press, clean up the saw marks with a few light passes.*

DRAWER. A small drawer rounds out the organizer. I started building the drawer by cutting the sides, front, and back to final size. Then I installed a dado blade in the table saw and cut the rabbets on the front and back. Next, you'll need to cut a groove in all four pieces for the ¼" plywood drawer bottom as shown in detail 'e.'

The drawer front also has a decorative cutout on the top edge (detail 'd,' opposite page). You can use the same techniques you used on the edging to make the cutout. Now, all that remains is to cut the drawer bottom to size and assemble the drawer. After gluing up the back and sides, simply slip the bottom into position and then attach the front. I used a couple of brads in each corner to reinforce the glue joint, as shown in detail 'f.'

Then, after the finish is applied, it won't be hard to find the perfect spot for this desk. W

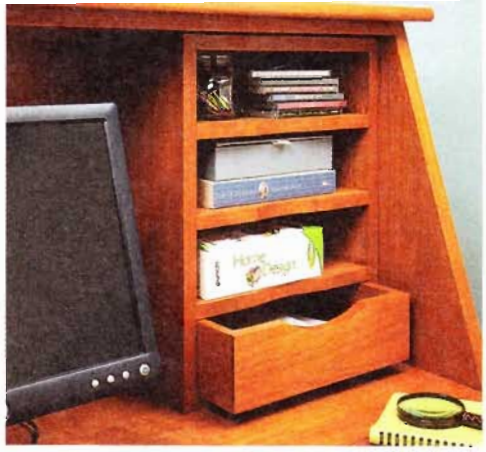

▲ The handy desk organizer keeps things neat and uncluttered on the desktop.

Materials, Supplies & Cutting Diagram

Lower Cabinet & Base

A	Top/Bottom (2)	¾ ply. - 40 x 19¼
B	Sides (2)	¾ ply. - 23¼ x 19¼
C	Vertical Dividers (2)	¾ ply. - 22¼ x 19
D	Adjustable Shelf (1)	¾ ply. - 18¾ x 10¼
E	Pull-out Shelf (1)	¾ ply. - 17¾ x 18⅛
F	Back (1)	¼ ply. - 40 x 22¾
G	Edging (1)	¼ x ¾ - 30' Rgh.
H	Facing (1)	¼ x 2¼ - 20' Rgh.
I	Base Front (1)	¾ x 5⅝ - 42½
J	Base Back (1)	¾ x 4⅞ - 41
K	Base Sides (2)	¾ x 5⅝ - 21
L	Corner Blocks (4)	¾ x ¾ - 4⅛
M	Front Cleat (1)	¾ x 1½ - 41
N	Side Cleats (2)	¾ x 1½ - 18
O	Base Panel (1)	¾ ply. - 41 x 20¼
P	Door Rails (4)	¾ x 2¼ - 16 15/16
Q	Door Stiles (4)	¾ x 2¼ - 23⅛
R	Door Panel (2)	¼ ply. - 16 15/16 x 19⅝
S	Top Panel (1)	¾ ply. - 20¾ x 42
T	Bullnose Edging (1)	¼ x ¾ - 10' Rgh.

Upper Cabinet

U	Top (1)	¾ ply. - 40 x 9¾
V	Bottom (1)	¾ ply. - 40 x 15¼
W	Sides (2)	¾ ply. - 19 x 15½
X	Back (1)	¼ ply. - 40 x 19
Y	Beveled Edging (1)	¼ x ¾ - 39
Z	Top Panel (1)	¾ ply. - 11¼ x 42
AA	Door Rails (2)	¾ x 2¼ - 37½
BB	Door Stiles (2)	¾ x 2¼ - 18⅝
CC	Outside Panel (1)	¼ ply. - 15⅛ x 37½
DD	Inside Panel (1)	¼ ply. - 14⅛ x 36½

Organizer

EE	Sides (2)	¾ ply. - 8 x 17⅜
FF	Shelves (5)	¾ ply. - 7¾ - 12½
GG	Edging (1)	¾ x ¾ - 8' Rgh.
HH	Back (1)	¼ ply. - 17⅜ x 12½
II	Drawer Sides (2)	½ x 8 - 3 7/16
JJ	Drawer Frnt/Back (2)	¾ x 3 7/16 - 11⅜
KK	Drawer Bottom (1)	¼ ply. - 10⅞ x 7½

- (34) #8 x 1¼"Fh Woodscrews
- (20) #8 x 2" Fh Woodscrews
- (33) #6 x ¾"Fh Woodscrews
- (1 pr.) 2½"x ¾" Flush Bronze Hinges
- (4) 5mm Steel Shelf Pins
- (16) 5mm Steel Shelf Pin Sleeves
- (2 pr.) Card Table Hinges
- (1 pr.) 18" Drawer Slides
- (3) 1¼"-dia. x 1⅛" Knobs
- (2) ½"-dia. Rare-Earth Magnets w/Cups & Washers

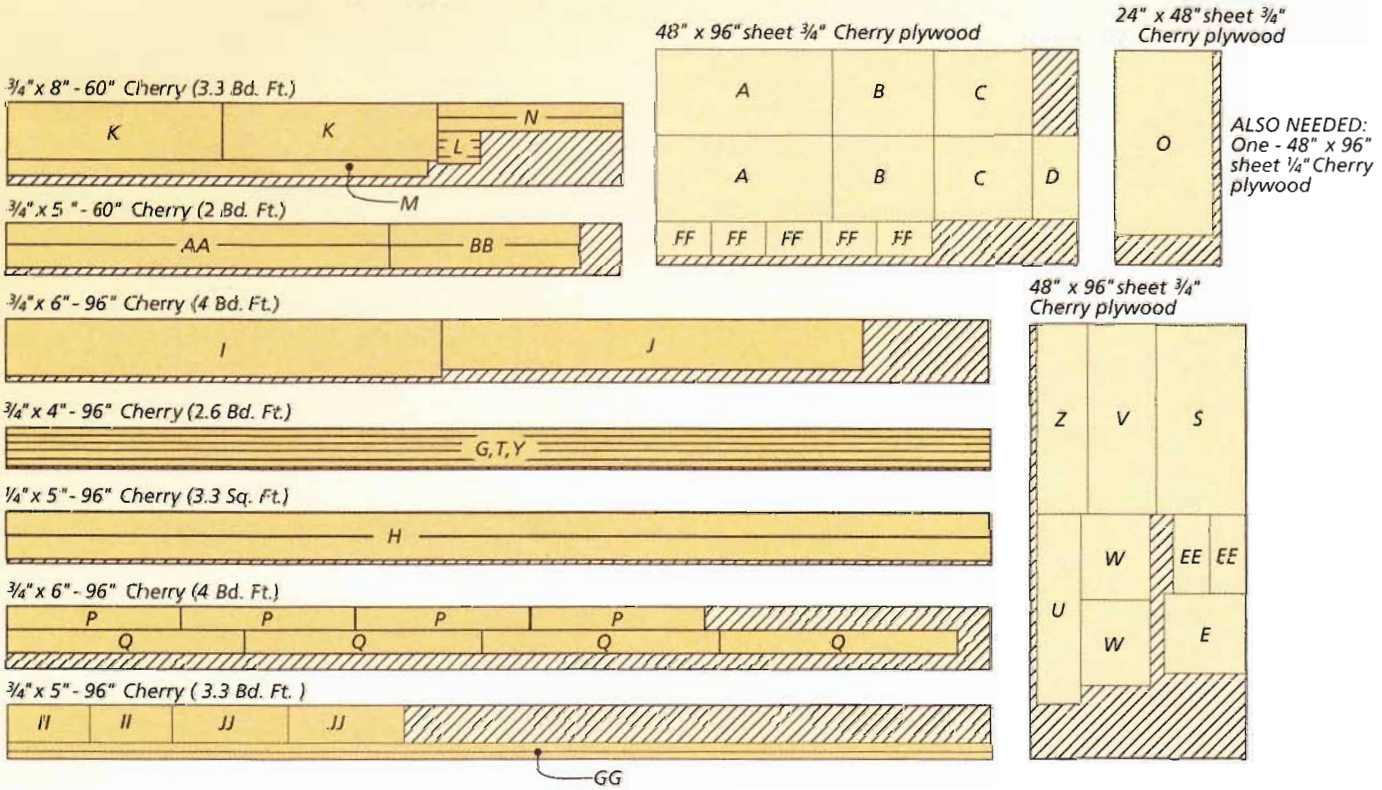

seamless plywood Edging

Covering plywood edges with grain-matched hardwood edging is a breeze if you keep a few simple techniques in mind.

▲ A good rip blade makes a smooth cut (top). A combination blade often burns the stock.

Plywood is a practical choice for large furniture projects. It's more dimensionally stable than solid wood, and saves a lot of time over gluing up large panels. The only downside is you'll have to deal with the problem of exposed plywood edges. There are several options for covering the edges, but I usually opt for making my own ¼"-thick hardwood edging in the shop. This allows me to make sure I get a good match for the color and grain of the plywood. And, if you follow a few simple principles, it's easy to do.

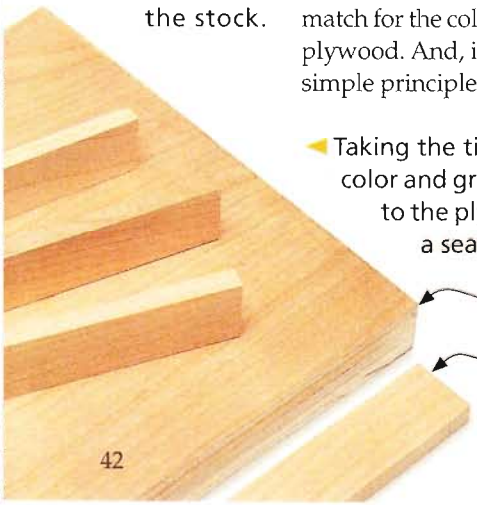

◄ Taking the time to match the color and grain of the edging to the plywood makes for a seamless transition.

STOCK SELECTION. Attractive edging should blend in as seamlessly as possible with the plywood. So I start by choosing the stock carefully. I often cut a test strip and wipe it and the plywood with mineral spirits to get an idea of what they'll look like after finishing.

SIZING THE EDGING. Generally, you can make edging from common 4/4 stock by planing it slightly thicker (about 1/16") than the plywood and then cutting strips from the edge. This way, you won't need to worry about trimming it flush, just a light sanding is all it takes.

After planing the stock to thickness, you're ready to move to the table saw. While cutting the edging is a pretty straightforward operation, there are a few things to keep in mind. First, make sure to install a good rip blade in the table saw. A high-quality rip blade will leave a surface that needs little follow-up work. Combination blades are not as well-suited for these cuts and can often result in burn marks that take a lot of sanding or planing to remove (top photo at left).

The next step is to set the rip fence. For most applications, ¼"-thick edging is sufficient, and you can make this cut safely by setting the fence for a ¼" cut and using a thin push block (lead photo).

For edging thinner than ¼", I prefer to cut the strips on the "outside" of the blade instead. A ripping guide in the miter slot can make short work of this. The illustration at the top of the opposite page shows you how it works.

Now you can make the cuts. If you're not satisfied with the quality of the surface after the cut, you can always joint the edge of the board after each cut. This results in one perfectly clean face for each strip. The other side is still good enough for a glue surface. It's also a good idea to cut a couple of extra pieces

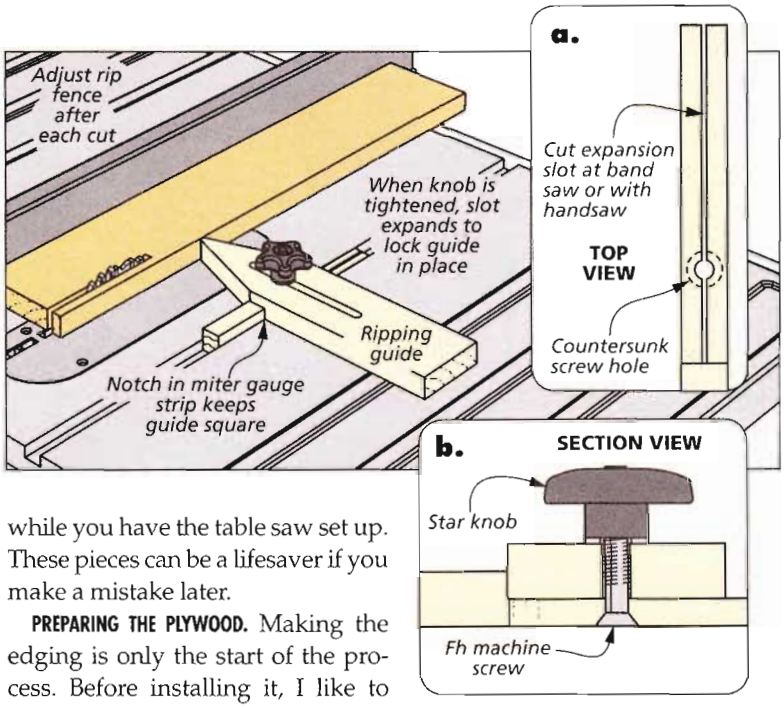

while you have the table saw set up. These pieces can be a lifesaver if you make a mistake later.

PREPARING THE PLYWOOD. Making the edging is only the start of the process. Before installing it, I like to make sure the plywood edges are straight and smooth. A smooth edge allows the glue to adhere properly and maintain its strength throughout the life of the project. After that, you're ready to cut the edging to fit and attach it to the plywood. This is where a little patience and a few easy techniques pay off.

INSTALLING THE EDGING. Normally, gluing the edging to the plywood is simply a matter of spreading glue on the edging, adding a caul, and clamping it in place. Sometimes, however, the glue can make the surfaces slippery and difficult to hold the edging in position while clamping. Fortunately, there are a couple easy fixes for this problem.

TAPE. The first thing to try is to simply tape the edging in place before clamping. Usually, this will keep the piece straight. In fact, if you're working on an assembled project, tape might be all the clamping power you need.

BRADS. You may run into situations when tape doesn't prevent slipping. This often happens on longer workpieces or when applying edging to an angled surface. For these situations, I use brads to hold the edging. I don't nail them through the outside, which would spoil the appearance. Instead, I tap them into the edge of the plywood and cut the heads off. The sharp end of the brad grabs the edging and holds it in place while you add clamps. The drawing below shows what I mean.

SANDING. With the edging installed, the last step is to make sure it's flush with the plywood. For this, all you need is a simple sanding block like the one shown in the far right drawing below. Simply cut a notch in the block to match the thickness of the edging. This way, you don't have to worry about accidentally sanding through the thin plywood veneer as you dress the edge.

These techniques make adding edging to plywood a simple task. And that frees you to use plywood creatively in your projects. W

Shop Tip: Beveled Trim

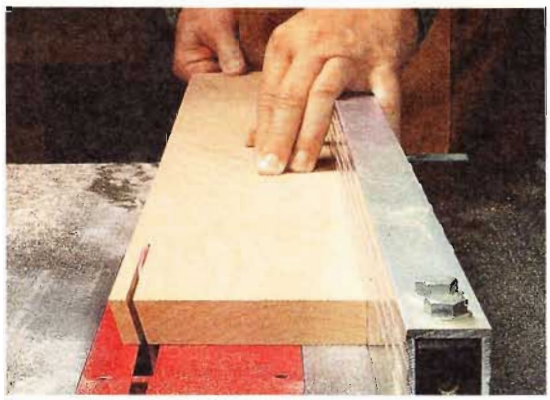

▲ Cutting the beveled edging for the drop-front desk on page 32 is just a matter of tilting the blade on your table saw.

Woodsmith GO ONLINE EXTRAS

For information on making your own shop-made ripping jig, visit our website at Woodsmith.com.

How-To: Apply Edging

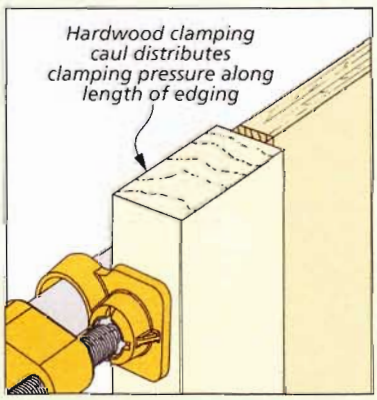

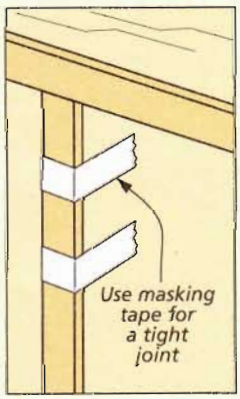

Clamping Strategies. *When possible, use a caul and clamps to attach the edging. When adding edging to an assembled project, masking tape can take the place of clamps.*

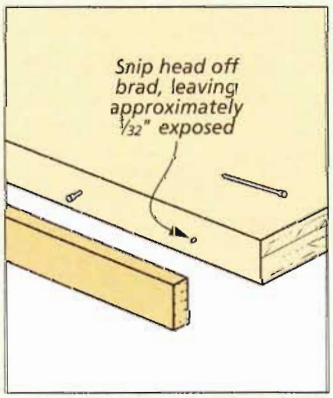

Brads. *Clipping the heads off of a series of brads in the plywood helps hold the edging.*

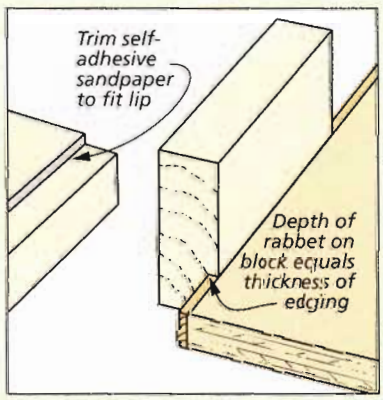

Sanding Block. *A block with a rabbet cut to match the thickness of the edging makes short work of sanding.*

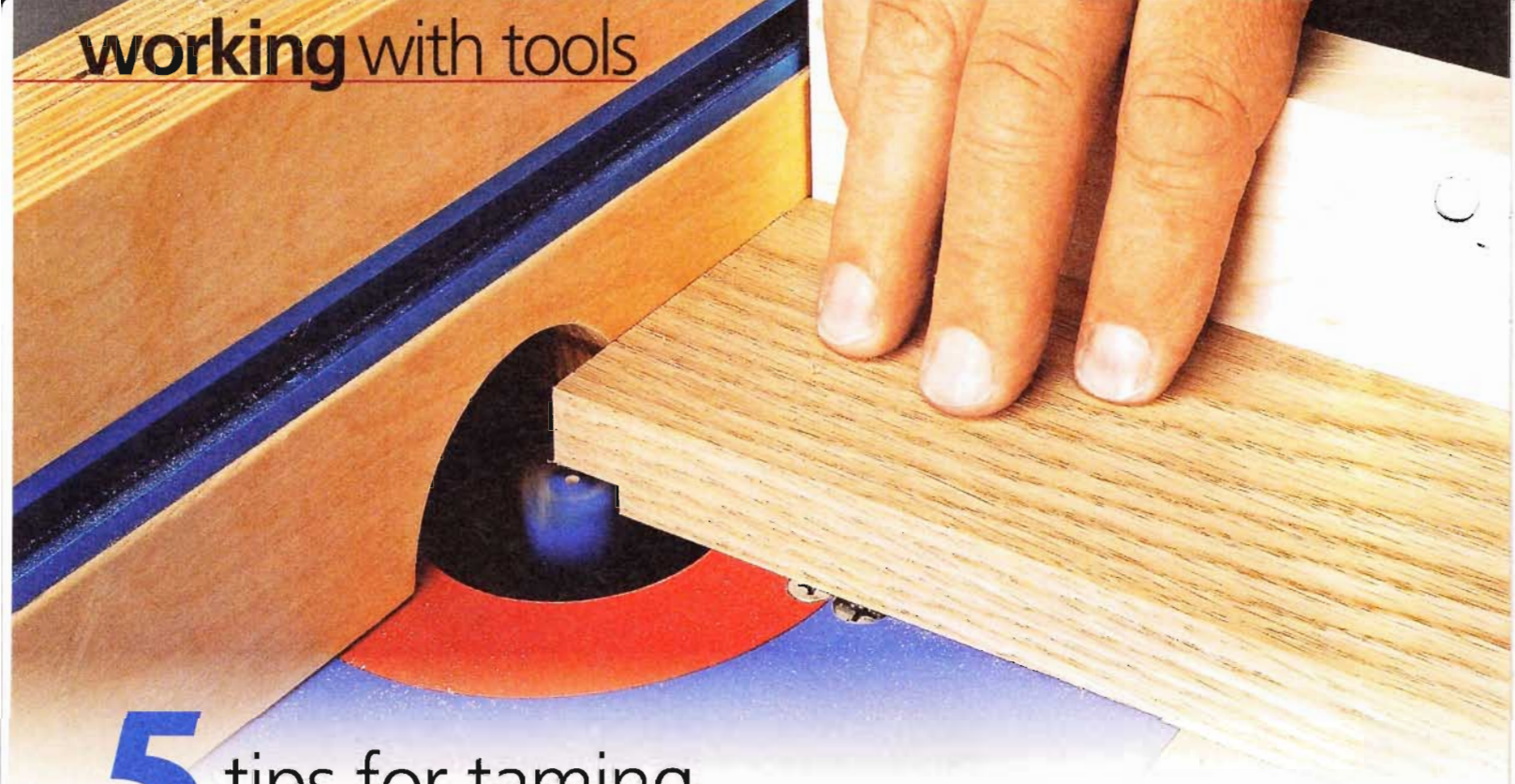

5 tips for taming Router Table Tearout

Tearout on the router table shouldn't be something you have to live with. Here are a few simple steps you can take to avoid it.

Whether it's for joinery or adding a decorative profile to the edge of a workpiece, I use my router table on just about every project. And there are few things more frustrating when using the router table than hearing the splintering sound of tearout. It's usually a signal that I'm going to be in for a lot of sanding or that I'm going to have remake a part.

Fortunately, aside from starting with a good, sharp bit, there are several steps you can take to prevent tearout from happening. Here's a look at five, simple strategies that I use in my shop for combating tearout on the router table.

1 Read the Grain

Just like the fur on the back of a cat, the grain along the edge of a board tends to run in one direction. If you feed the workpiece into the bit "against the grain," the odds of experiencing tearout greatly increase.

▲ Whenever possible, I try to orient the workpiece so the grain runs "downhill" from the feed direction.

So whenever I have a choice on which edge of a board I'm routing, I take a look at the workpiece to "read" the grain before feeding it into the router bit. To minimize tearout, the grain should run off the edge of the board in the same direction as the rotation of the bit, as shown in the drawing below.

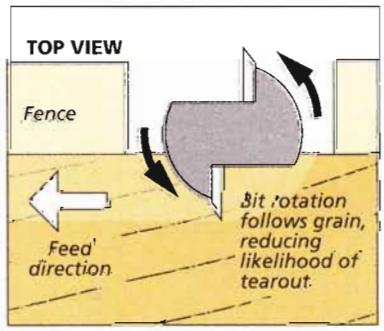

2 Shallow Passes

You may have noticed that tearout seems to occur more often when you're taking a heavy cut. If you try to "hog off" too much material in one pass, the bit tends to pull out large chunks from the workpiece. A good way to avoid this problem is to rout the profile in multiple, shallow passes.

Usually, I'll set the bit to the correct height and use the fence to control the depth of cut (see drawing). I start with the fence positioned for a light cut. Then I gradually move the fence back between passes. Taking shallow passes removes less material at a time, giving you a smoother cut with minimal tearout.

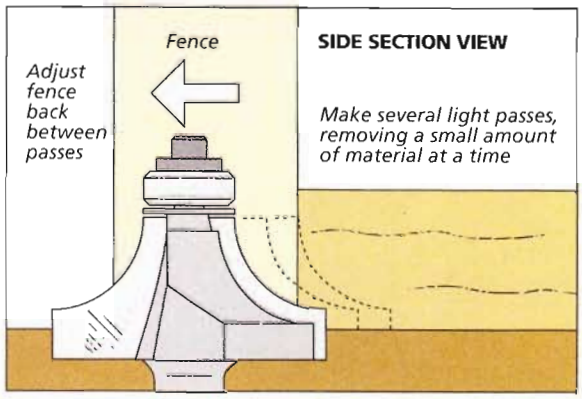

3 Back It Up

Without a doubt, the worst situation for tearout on a router table is when you're routing across end grain. As the bit exits the cut, it's almost guaranteed to pull large splinters out of the trailing edge of the workpiece, as shown in the upper drawing at right.

There are a couple of ways to deal with this problem. If I'm routing across all four edges of a workpiece, the easiest solution is to simply rout the ends of the workpiece first. This way, the areas of end grain tearout on the workpiece will be cleaned up when you rout the long edges.

BACKER BOARD. One other method of avoiding end grain tearout is to use a backer board. This is nothing more than a scrap piece of wood that is held against the back edge of your workpiece as you push it past the bit. (I actually rout into the backer board for about an inch or so, as you can see in the lower drawing below.)

The backer board supports the wood fibers as the router bit exits the cut, preventing tearout.

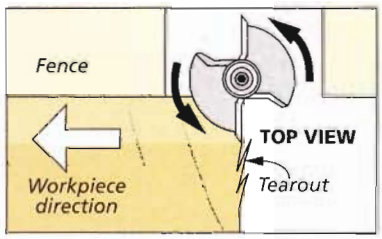

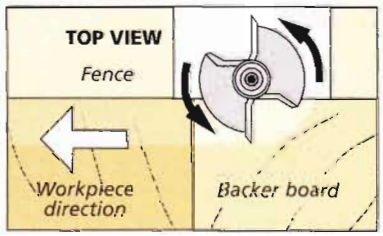

4 Reduce the Opening

Another way to control tearout is to provide support for the workpiece as close to the edge of the bit as possible. Some router table fences have adjustable faces that allow you to adjust the size of the opening to match the bit you're using. But for even more support, you can make a "zero-clearance" auxiliary face for your router table fence.

Simply trace the bit profile onto a piece of hardboard and cut it out with a scroll saw or jig saw. Then, attach the auxiliary face to your router fence with double-sided tape.

The reduced opening provides back-up support to the edge of the workpiece, all the way up to the router bit.

A zero-clearance auxiliary fence provides extra support for the workpiece.

5 Backrouting

One task that I frequently rely on my router table for is cutting rabbets. And I find that it's pretty common to get tearout along the upper shoulder of the rabbet. This kind of tearout has a lot to do with the direction that the workpiece is fed into the router bit.

When routing in the "normal" direction on a router table (from right to left), the cutting edges of the bit remove material from the workpiece as they *exit* the cut. As a result, the bit tends to chip fibers along the edge of the workpiece.

But by feeding the workpiece into the bit from the opposite direction (backrouting), the bit is cutting as it *enters* the workpiece. So you'll eliminate most tearout.

The only problem with backrouting on a router table is the tendency for the bit to grab the workpiece and pull it forward, or kick it out away from the fence. This is especially true when taking a heavy cut using a large bit. However, if done safely, there are occasions when backrouting can really help to avoid tearout.

The trick to backrouting safely is to take a very light pass (about 1/32" deep), as shown in the upper drawing at right. This initial pass establishes a clean, crisp upper shoulder for the rabbet. Once this is done, you can remove the rest of the waste by routing in the opposite direction, just as you see in the lower drawing at right. W

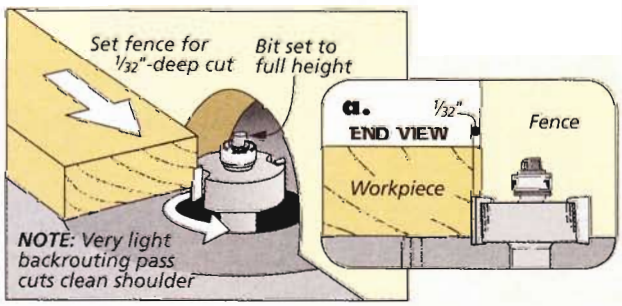

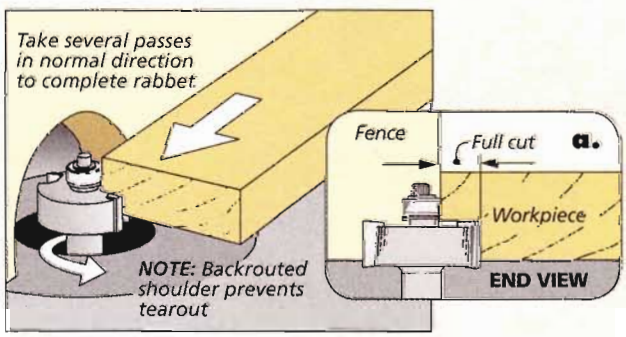

creating a distressed Milk Paint Finish

With help from a random collection of "tools" and the vibrant color of milk paint, you can create an authentic-looking, time-worn finish.

Today, it seems like old is new. Painted finishes that are distressed to simulate years of wear and tear on a project are quite popular — and for good reason. Applying a casual, distressed-paint finish offers a pleasant break from a fussier and much more demanding "formal" finish. And on the right project, like the box-jointed pine tray from *Woodsmith* No. 183 shown here, the result might be good enough to fool the experts. The bonus is that since the goal is simply an old and well-worn look, the technique is easy and very forgiving.

MILK PAINT. One of the best ways to achieve this casual look is to take advantage of the vibrant colors of traditional milk paint. Milk paint is quite different from modern oil-based or latex paints. Basically, it consists of a mixture of milk proteins, lime, and natural pigments. The milk proteins (casein) play the role of binder in the paint. (Casein is also used as an ingredient in certain types of glue.) Milk paint comes in powdered form and is mixed with water as needed. It's easy to apply, dries fast, and gives you a rustic, washed look that instantly adds authenticity.

LAYERS. The sequence of steps used to recreate the history of wear and hard use a project might show

Start the process by adding years of wear with some vigorous sanding. Concentrate on the corners, sharp edges and other likely spots.

Next, use your "distressing" tools to add to the history with dings, dents, and scratches.

A coat of red milk paint comes next. Don't worry about smooth, even coverage.

is detailed in the photos below and the main photo at left. As you can see, a distressed-paint finish is created in built-up layers of finish and wear and tear.

FIRST, SOME WEAR. You start by adding some serious wear to your project in the form of vigorous sanding. Don't be afraid to be aggressive. Knock off all the sharp edges and corners. Certain areas (like the handle) would naturally receive more wear, so give these spots special attention. Don't worry about overdoing it. Just try to imagine the toll that a hundred years or more of use would take.

DISTRESS. Now you'll add some insult to your sanding injury. Dents, dings, scratches, and gouges are the natural result of years of use. This distress can be added using just about anything handy. Keys, bolts, nails, a rasp, a screwdriver, or any other hard object will all work well.

The idea is to make this abuse look general and unplanned, as it would naturally occur. So work over all the surfaces, maybe concentrating just a bit more on the edges and other spots that would be more vulnerable. Again don't be shy. You don't want to break anything, but make the damage noticeable.

A COAT OF PAINT. Now comes the first coat of milk paint — a deep, rich *Barn Red*. This is pretty straightforward. Mix up enough paint according to the directions and apply it with a foam brush.

You'll find that milk paint works differently than other paints. The water in the paint is quickly absorbed into the wood, so you'll get little flow. You just have to brush a little more vigorously than you otherwise would. The paint may appear streaky and not cover evenly, but this is normal for milk paint. Since this is simply a base coat, basic coverage is all you're after.

MORE YEARS. Once the paint dries, you can add more years of age to the tray. Start with sandpaper and remove the paint from the edges, corners, and obvious wear areas. You want raw wood to show again. Then add a few more decades of wear and tear to some of the "high traffic" spots with your arsenal of tools, as shown in the main photo on the opposite page.

A SECOND COAT. After all this use and abuse, the tray is due for another coat of paint. But this time around, you'll want to use a different color. (I used *Soldier Blue*.) The process for applying the paint is the same. And again, don't worry if the coverage isn't complete and even.

A HARD LIFE. The next step is to again expose some of the raw wood and the underlying red paint. Sandpaper is your tool for this step. Hit the corners, edges, handle, and natural wear areas.

A LITTLE DIRT AND GRIME. Now there's just one missing feature that will complete the look — the "patina" created by the accumulation of dirt and grime. To simulate this, I glazed the entire project with a light brown oil stain. This gives the bare wood an aged color and the painted surfaces a well-used, slightly dirty appearance.

Go over the entire project, wiping on a light coat of stain and then wiping off the excess quickly. The goal is to leave some stain on the painted surfaces and bare wood, in the distressed areas, and in the cracks and crevices where dirt would naturally accumulate.

A PROTECTIVE FINISH. The final step is a bit ironic. After your best efforts at making the project look old and beat up, you want to protect it from further wear. So a light topcoat of low-gloss spray lacquer, or water-based finish is in order. Now you can put your hard work on display and prepare for the inevitable question, "Where did you find that great antique?" W

▲ The bright color of milk paint and a large dose of wear and tear team up for an authentic, aged look.

▲ After adding more wear and tear, brush a coat of blue paint over the red.

▲ When the blue paint is dry, sand through it to expose red paint and bare wood.

▲ A light brown oil stain adds a patina of grime and age. The stain will darken the bare wood and subdue the bright color of the paint.

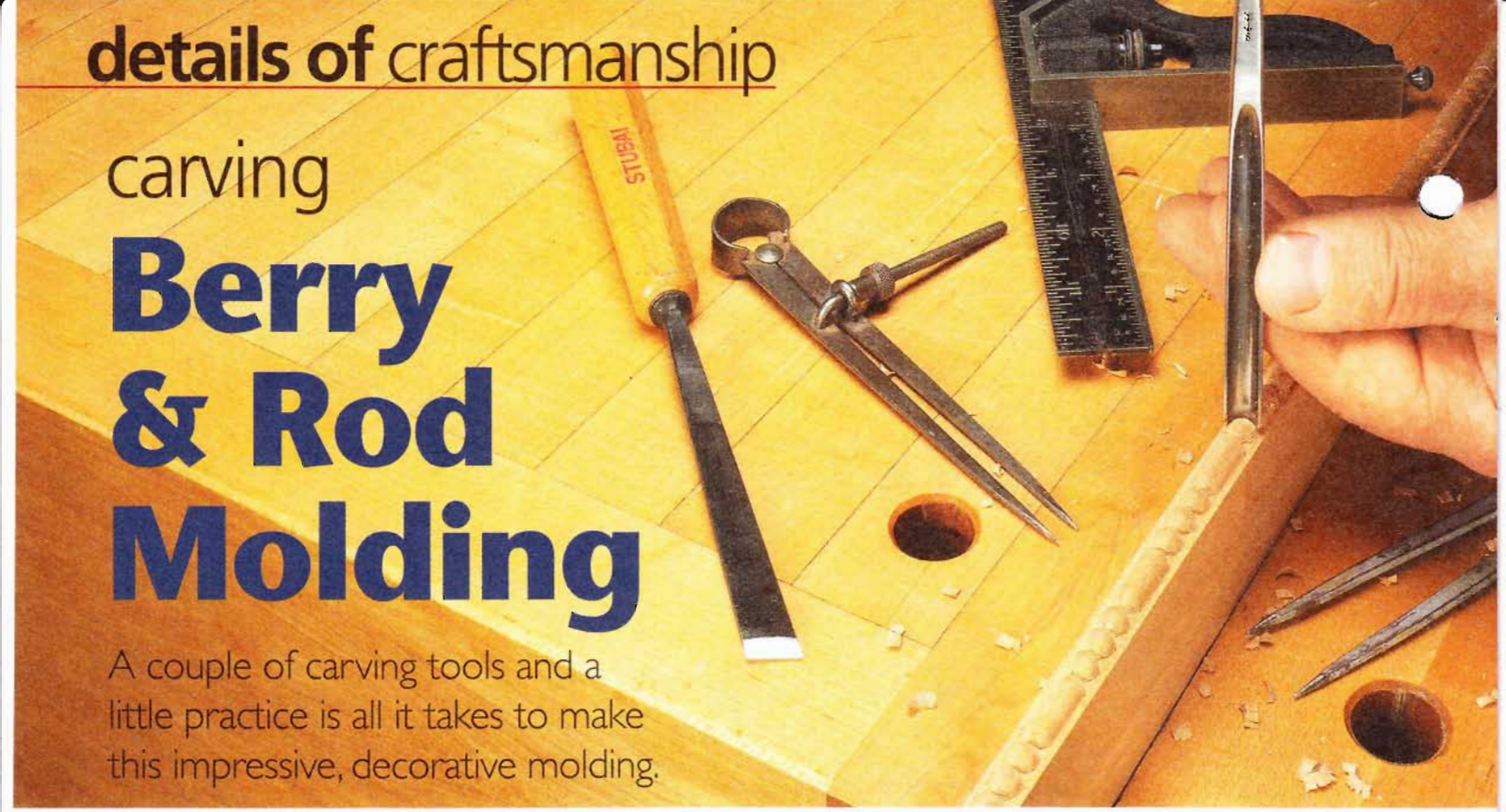

carving

Berry & Rod Molding

A couple of carving tools and a little practice is all it takes to make this impressive, decorative molding.

When the task is woodcarving, I'll readily admit to being out of my comfort zone. But, on the other hand, I've found that not all carving is equally challenging. A case in point is making simple, repetitive moldings like the berry and rod shown above. Also called "bead and rod" or "ball and sausage," this traditional molding has been used as a decorative element for centuries. And it can be carved successfully with just a few tools and a minimum of practice.

◄ The tool kit for carving berry and rod molding is pretty basic — all you need is a gouge and a skew chisel.

WHERE. Berry and rod molding can be used in place of a simpler bead molding. It makes an eye-catching dividing element or edge treatment. An example is shown at the top of the opposite page.

PRE-FORMED. A major reason for the ease in carving this molding is that you start out with a pre-formed profile — a common bead. So essentially, you're halfway home before you ever have to pick up a carving tool.

THE TOOLS. Carving berry and rod molding only requires two carving tools — a gouge and a skew chisel. But one key is to use a gouge with a curve or "sweep" that matches the shape of your initial bead molding. For example, since here I'm working with a ¼"-dia. bead, I used a #9 x ¼" sweep gouge. This makes it much easier to form nicely rounded berries and rods.

How-To: Step-by-Step Technique

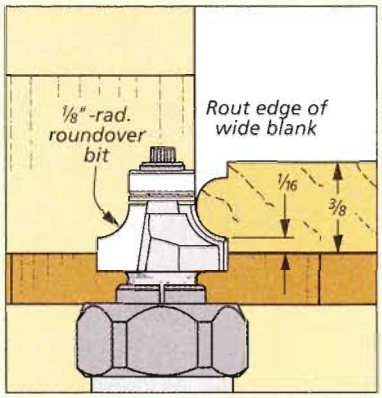

Rout a Bead. *You start the molding by routing a "shouldered" bead on the edge of a wide blank.*

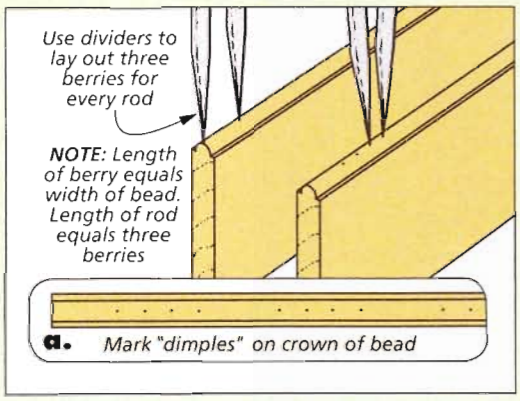

A Simple Layout. *To lay out the carving, use dividers to mark a 3-to-1 series of berries and rods along the crown of the bead molding.*

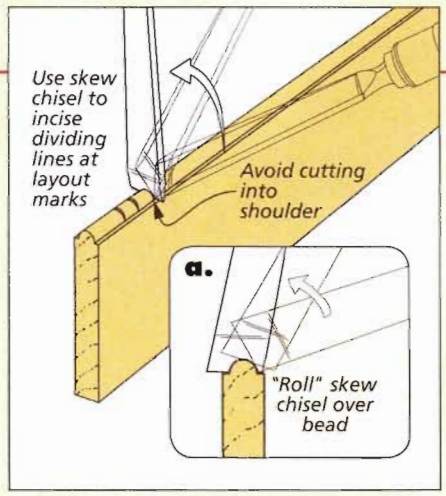

Dividing Cuts. *Simply "roll" the skew chisel over the bead with firm pressure to make dividing cuts on the layout marks.*

GETTING STARTED. The technique for making berry and rod molding is shown in the How-To box below. The first step is to rout a bead on the edge of a wide blank. (When the carving is completed, the molding is ripped free at the table saw.) I used ⅜"-thick stock and left a 1/16" shoulder on either side of the bead. The shoulders define the depth of the carved profile.

LAYOUT. Next, you can clamp the workpiece into the bench vise and lay out the individual elements. For this, a pair of dividers (two are better) comes in handy. The length of each berry matches the width of the bead molding — here ¼". Each rod is the length of three berries, or ¾". You lay out three berries followed by one rod. Just mark a series of small dimples along the crown of the bead molding.

INCISING CUTS. You'll begin the carving by using the skew chisel to "incise" a dividing line at each layout mark. Place the heel of the chisel at the intersection of the shoulder and the bead and "roll" it up while applying firm pressure. Stop just past the top of the bead and readjust the position of the chisel to make the cut down the opposite side. The trick is to do this without nicking the shoulder.

The cut doesn't need to go clear to the shoulder across the entire bead. Just make it deep enough to provide a good starting point.

ROUNDING CUTS. At this point, you're ready to pick up the gouge. To cut the rounded ends of the berries and rods, the gouge is used hollow side down. Holding the gouge nearly parallel to the bead, lay it over a berry centering it between two dividing cuts. Now, lift the handle as you gently push the gouge down into the dividing cut to form one end of the berry.

If your control is good and the wood is cooperative, this can be accomplished in one cut. But this is rarely the case for me. More than likely, you'll need several cuts to form a well-rounded end. Try to avoid digging the heels of the cutting edge into the shoulder of the molding. But this is easier said than done. So don't worry if you end up with small nicks.

I like to make eight or ten cuts in one direction, then flip the workpiece around to complete the other half of each berry and rod. Don't be obsessed with cutting perfectly rounded berries. You can take time to refine the shapes later on.

CLEAN THE SHOULDER. After shaping a set of berries and rods, switch back to the skew to clean the waste from the "corners" between the elements. I like to use both the point and the heel of the chisel to remove the remaining chips and smooth and level the background.

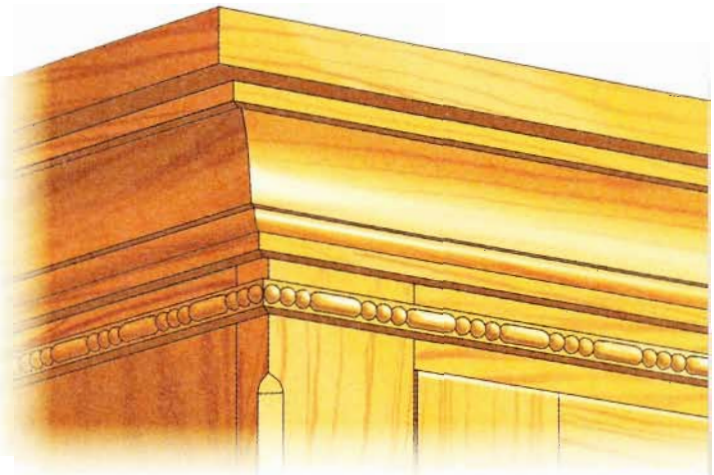

When applied below a crown molding, a berry and rod can add an interesting layer of detail.

REFINING. The final step is to use the gouge to define and refine the profiles. Hold the chisel vertically and work around each berry and rod end using gentle pressure to lightly incise the wood. Called "grounding", this gives the elements a crisp, distinct look.

A final once-over, smoothing any irregularities and refining the shapes, completes the carving. Don't worry about minor inconsistencies between the elements. It's the overall effect that's important.

MINOR SANDING. I don't spend much time sanding. You want the molding to retain its hand-carved look. Just use the folded edge of the sandpaper to clean a bit between the berries and smooth the tops.

Finally, you can carefully cut the molding from the blank. And you'll have a small, but very impressive, detail to add to your project. W

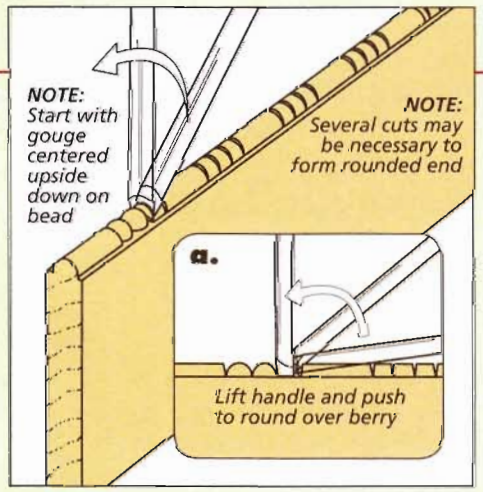

Rounding Cuts. *With the gouge centered over the berry, apply forward pressure and tip it down into the dividing cut.*

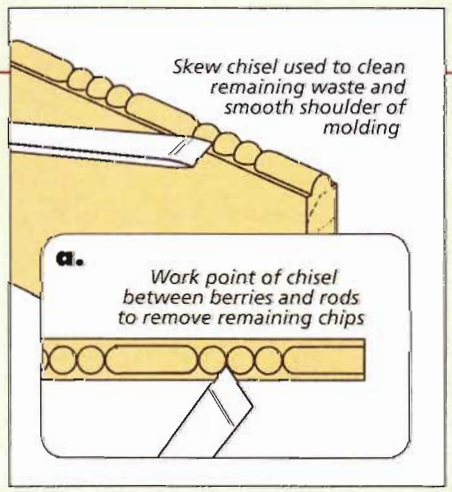

Cleanup. *After shaping the berries and rods, use the skew chisel to remove the remaining chips and smooth the shoulder.*

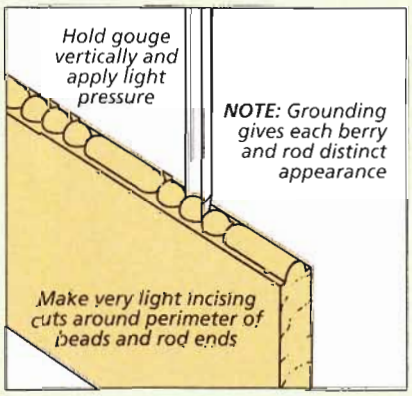

Grounding. *Light, vertical incising cuts will make each berry and rod end stand out from the background.*

Questions & Answers

Saw Blade Sharpening

Q ***The cost of sharpening a table saw blade seems to be about half the cost of a new blade. Will the sharpened blade perform as well or should I just buy a new saw blade?***

Bob Taylor
Portales, New Mexico

A You can tell the saw blade is dull when it starts to take more effort to feed the workpiece into the blade, or you experience burning on a cut.

Deciding whether to sharpen the blade or purchase a new one depends on a number of factors. The first is the overall condition of the saw blade.

PITCH BUILD-UP. A dirty blade will exhibit many of the same signs as a dull blade, but it may not be dull at all. So to get a good look at the condition of the teeth, I'll first clean the blade thoroughly, using a commercial blade cleaner and a brass wire brush. This will remove most of the pitch and sawdust on the blade.

TOOTH CONDITION. With the blade clean, you can get a good look at the cutting edge of the teeth. If you find any chips in the carbide teeth, like those shown in the top photo at left, it's time to consider sending it off to a sharpening service. They can usually replace damaged teeth.

As you inspect the teeth, you can often tell if the cutting edges are no longer sharp. You'll see a shiny edge caused by a slight rounding on the carbide teeth. But if the teeth are in good condition, you can put it back in use in your saw.

PREVIOUSLY SHARPENED. If the blade has been sharpened before, you need to take a look at how much carbide is left on the teeth. When there's not much "meat" left, it's time to get a new blade. Your sharpening service can help you decide whether or not there's enough material left to sharpen.

COST. For me, the overall expense is the determining factor in deciding whether to sharpen or replace a saw blade. If the cost of sharpening and repairing broken teeth is close to the cost of a new blade, I'll opt for the new blade.

PROFESSIONAL EXPERIENCE. If you decide to have your blade sharpened, there's one other thing to consider. And that's the experience of your sharpening service. Some blades require special sharpening techniques due to the geometry of the saw teeth. Most sharpening services use automated equipment to sharpen blades, so it pays to find out about their experience up front.

Finally, it's a good idea to ask other woodworkers in your area for recommendations. W

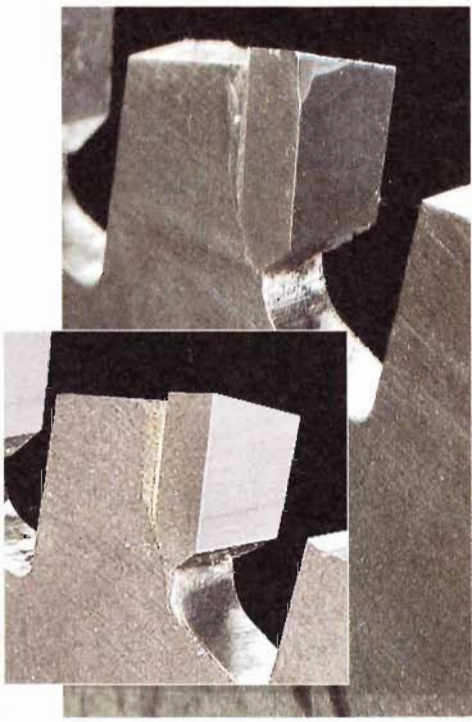

◄ After a little clean up, it's easy to spot a chipped tooth on a saw blade, like the one in the upper photo at left. The inset photo shows the same saw blade after sharpening. The edges are square and clean. And all of the carbide is intact.

Do you have any questions for us?

If you have a question related to woodworking techniques, tools, finishing, hardware, or accessories, we'd like to hear from you.

Just write down your question and mail it to us: Woodsmith Q&A, 2200 Grand Avenue, Des Moines, Iowa 50312. Or you can email us the question at: woodsmith@woodsmith.com.

Please include your full name, address, and daytime telephone number in case we have questions.

Sources

KNOCK-DOWN FASTENERS

Knock-down fasteners come in a multitude of styles. The article on page 8 shows just a few of the more common ones.

The *Blum* KD fittings (#148415) and surface-mount connectors (#148575) both came from *Woodcraft*. *Lee Valley* carries the metal biscuit fasteners (00S21.10), the tension rod nuts (05G07.10), and the corner joiners (00S14.02). The connector bolts, cap nuts, and cross dowels are available in a number of sizes and finishes from *Lee Valley* and *Rockler*.

SMOOTH SURFACE

A scraper is a great way to get a glass-smooth finish without sanding. Both the cabinet scraper and scraper plane shown in the article on page 10 will help make this task easier. The *Veritas* cabinet scraper is sold by *Lee Valley* (05P32.05) and the scraper plane is from *Lie-Nielsen*. Both companies also offer other styles of scraper planes as well.

SET-UP BLOCKS

Brass set-up blocks (like the ones shown on page 12) can be purchased from several of the woodworking suppliers shown in the margin at right. The aluminum set-up blocks were purchased from *Lee Valley* (05N58.01).

FRAME & EASEL

To build the picture frame on page 18, all you'll need are some brass-plated turnbuttons. These are available from *Rockler* (27912).

The brass knurled thumb nut, machine screw, and washer used for the clamp on the easel can be obtained from a local hardware store or home center.

When it came to finishing, we used *General Finishes' Gel Stain* (*Java*) on the easel and the frame trim. To bring out the figure of the curly maple, a coat of *General Finishes' Seal-a-Cell* was wiped onto the frame facing. Then everything was finished with a couple coats of lacquer.

COFFEE TABLE

The only hardware you'll need to build the coffee table on page 22 is a handful of woodscrews. We purchased the ¼" tempered glass from a local glass shop.

The legs and frame of the table are unstained, but the cherry grids were stained with a mixture of three parts *Zar Cherry Stain* and one part *Wood Kote Jel'd Stain* (*Cherry*). Then the whole table was finished with lacquer.

DROP-FRONT DESK

All of the hardware items used to build the desk on page 32 are available from *Lee Valley*. The list includes the no-mortise hinges (00H51.23), steel shelf pins (00S10.52), shelf pin sleeves (00S10.62), card table hinges (00W23.01), drawer slides (02K62.45), bronze knobs (02W14.44), and the rare-earth magnets (99K31.01), steel magnet cups (99K32.51), and steel washers (99K32.61).

The solution used to antique the card table hinges came from *Van Dyke's Restorers*. And the desk was stained with three parts *Zar Cherry Stain* and one part *Wood Kote Jel'd Stain* (*Cherry*).

MILK PAINT FINISH

We purchased the milk paint used in the article on page 46 from *Woodcraft*. It's also available directly from the *Old-Fashioned Milk Paint Company*.

Online Customer Service

Click on *Magazine Customer Service* at **www.woodsmith.com**

- Access your account status
- Change your mailing or email address
- Pay your bill
- Renew your subscription
- Tell us if you've missed an issue
- Find out if your payment has been received

MAIL ORDER SOURCES

Project supplies may be ordered from the following companies:

Woodsmith Store
800-444-7527
Brass Set-Up Blocks, Cap Nuts, Connector Bolts, Cross Dowels, General Finishes' Stains, Knock-Down Fasteners, Turnbuttons

Amazon.com
Brass Set-Up Blocks, Milk Paint

Lee Valley
800-871-8158
leevalley.com
Aluminum Set-Up Blocks, Cabinet Scrapers, Cap Nuts, Connector Bolts, Corner Joiners, Cross Dowels, Drop-Front Desk Hardware, Knock-Down Fasteners, Metal Biscuit Fasteners, Scraper Planes, Tension Rod Nuts

Lie-Nielsen Toolworks
800-327-2520
lie-nielsen.com
Cabinet Scrapers, Scraper Planes

Old-Fashioned Milk Paint Company
866-350-6455
milkpaint.com
Milk Paint

Rockler
800-279-4441
rockler.com
Brass Set-Up Blocks, Cap Nuts, Connector Bolts, Cross Dowels, Knock-Down Fasteners, Turnbuttons

Van Dyke's Restorers
800-558-1234
vandykes.com
Brass Blackening Solution, Milk Paint

Woodcraft
800-225-1153
woodcraft.com
Blum KD Fittings, Milk Paint, Surface-Mount Connectors

Woodsmith®

8-VOLUME LIBRARY SET

Get all 8 hardbound volumes of **Woodsmith** (Volumes 22 through 29). Each volume includes a year of issues, plus a table of contents and a handy index.

Regular Price ..... ~~$239.60~~
Subscriber Discount Price ..... $159.95 **SAVE OVER $75**

FREE SHIPPING on your entire order!

Individual volumes also available.
(Offer expires 9/30/09)

Go to Woodsmith.com
or Call 1-800-444-7527 Today to Order Yours!

looking inside
Final Details

► *Coffee Table.* The unique look of the frame and contrasting grids immediately draws your attention. But this glass-panel table is surprisingly easy to build. Turn to page 22 and you'll find all the details.

▲ *Frame and Easel.* This small project is a great way to show off your attention to detail. The bonus is that the work will go quickly and, as you can see, the result speaks for itself. Check it out on page 18.

▲ *Drop-Front Desk.* The traditional styling of this desk will make it an attractive complement to any room. All the elements are here — slant-front top, frame-and-panel look, and simple, tasteful details. It starts on page 32.

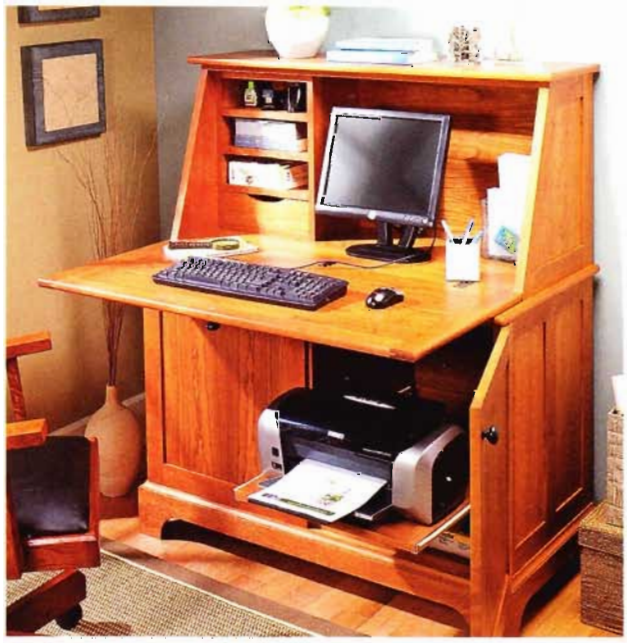

▲ *Handy Computer Storage.* On the inside, the spacious desk meets all your modern organizational needs. There's a place for every computer component and plenty of extra storage as well.

Online Extra

Frame & Easel

Optional 11 x 14 Size

Materials, Supplies & Cutting Diagram

		11 x 14 Size
A	Backer Top/Bottom (2)	1/4 hdbd. - 3 x 11
B	Backer Side (2)	1/4 hdbd. - 3 x 20
C	Facing Top/Bottom (2)	3/8 x 3 1/4 - 17
D	Facing Side (2)	3/8 x 3 1/4 - 20
E	Trim (1)	5/8 x 1 - 80 (rgh.)
F	Base Bottom (1)	3/4 x 5 - 17
G	Base Riser (1)	3/4 x 4 1/4 - 15 1/2
H	Base Top (1)	3/8 x 4 1/2 - 16
I	Frame Stop (1)	1/4 x 1/4 - 15 1/2
J	Vertical Support (1)	3/8 x 1 - 26
K	Clamp (1)	3/4 x 1 - 1 1/2

- (4) 7/8" Brass Turnbuttons w/Screws
- (2) #6 x 1" Brass Fh Woodscrews
- (1) 10-24 x 2" Brass Machine Screw
- (1) #10 Brass Flat Washer
- (1) #10 Brass Thumb Nut

1/2" x 4" - 84" Curly Maple (2.3 Sq. Ft.)

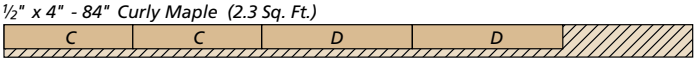

3/4" x 8" - 84" Poplar (4.7 Bd. Ft.)

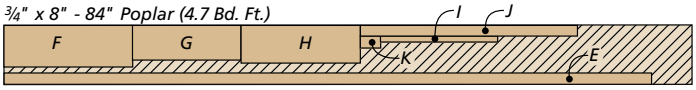

NOTE: *Parts C, D, E, H, I, and J are planed to correct thickness*

ALSO NEEDED: *One 12" x 24" sheet 1/4" hardboard*

©2009 August Home Publishing. All rights reserved.